

SWING DOORS

Floor springs and glass clamping fittings

Contents

Overview 04

FOR SINGLE LEAF SINGLE AND DOUBLE-ACTION DOORS

TS 500 NV 08

TS 500 N EN3 14

TS 550 NV 20

TS 550 NV F 26

ACCESSORIES

Accessories for floor springs 34

RSZ 7 smoke switch control unit 46

GLASS CLAMPING FITTINGS

GEZE Glass Fittings 50

Corner fittings and pivot bearings 52

Fanlight and connecting fittings 55

Locks and strike boxes 58

MODULAR FIXED PANEL PROFILE SYSTEMS

Fixed panel profile with clip-on cover profile design 40 64

OVERVIEW

	TS 500 NV	TS 500 NV with hold-open function	TS 500 N EN 3	TS 500 N EN3 with hold-open function	TS 550 NV	TS 550 NV F
Approval for fire and smoke protection doors	●		●			●
Max. door leaf width (mm)	1100	1100	950	950	1400	1400
APPLICATION POSSIBILITIES:						
Single-action doors (right/left)	●	●	●	●	●	●
Opening angle	170°	170°	170°	170°	170°	180°
Double-action doors	●	●	●	●	●	
Leaf weight up to kg	150	150	100	100	300	300
FUNCTIONS:						
Closing force, adjustable	●	●	EN 3 fix	EN 3 fix	●	●
Back check, fixed	●	●	●	●	●	●
Hydraulic latching action, adjustable	●	●			●	●
Closing speed, adjustable	●	●	●	●	●	●
Mechanical hold-open function		●		●	●	
Hold-open angle		85° 90° 105° 120°		85° 90° 105° 120°	80° – 165°	

● = yes

TABLE SHOWING THE RATIO OF CLOSING FORCE TO DOOR LEAF WIDTH

Closing force	Door leaf width (mm)
Size 2	up to 850
Size 3	over 850 up to 950
Size 4	over 950 up to 1100
Size 5	over 1100 up to 1250
Size 6	over 1250 up to 1400

COVER PLATES

There are various cover plates with screw accessories available for floor springs. These can be used on the right, left and with double-action doors.

PIVOT HINGES / DOOR RAILS

Special upper pivots and door rails with 36 mm pivot point distance are required for the installation of a floor spring on single-action doors. (See accessories for floor springs from page 32)

THE REQUIREMENTS

The standard (EN 1154) stipulates that the door closer size (closing force) must be set to match the door leaf width. The next higher size has to be set if the structural circumstances (door height, door weight) or local conditions (wind influence) make this necessary.

THE GEZE SOLUTION

The floor spring – versions of the TS 500 NV and TS 550 NV series comprise several sizes in one housing. Using an adjustment screw, the corresponding closing force can easily be adapted to the structural and local circumstances.


HCU


2

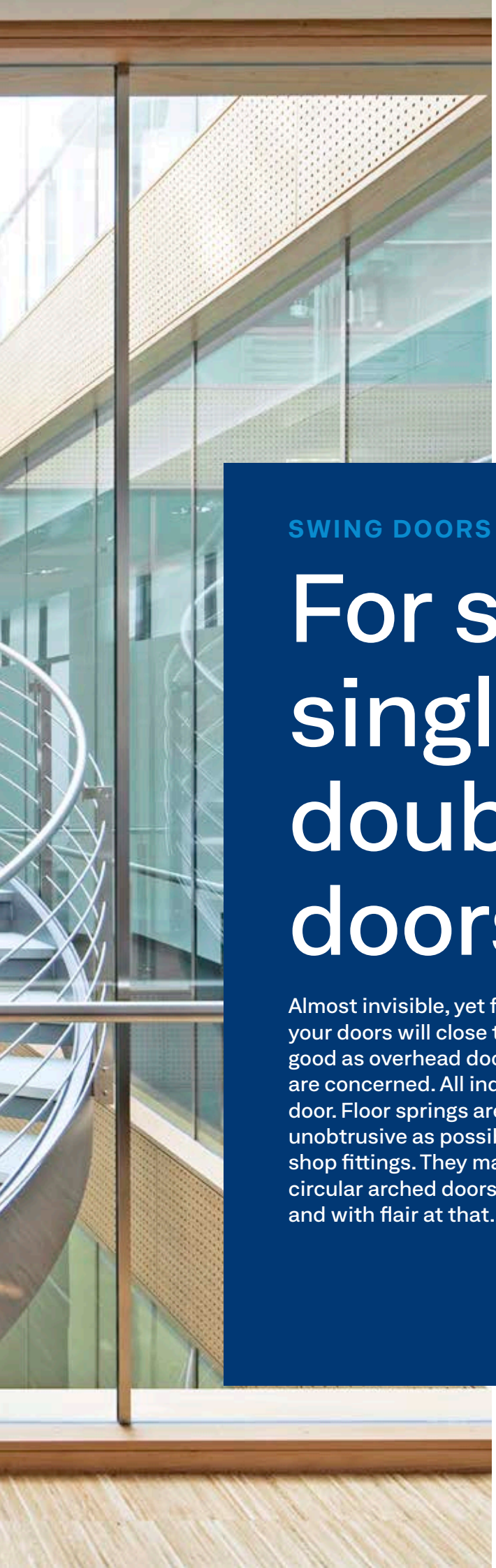

SWING DOORS

For single leaf single and double-action doors

Almost invisible, yet fully functional: Floor springs ensure that your doors will close themselves after opening. They're just as good as overhead door closers where convenience and safety are concerned. All individual parts are built into the floor or the door. Floor springs are ideal when the door design should be as unobtrusive as possible – be it at elegant portals or in upmarket shop fittings. They master this particular challenge for semi-circular arched doors or all-glass doors as a single system – and with flair at that.

TS 500 NV



Floor spring for single leaf single and double-action doors of up to 1100 mm leaf width with adjustable closing force EN 1–4 and with optional hold-open function

AREAS OF APPLICATION

- Fire and smoke protection doors
- Right and left single- and double-action doors
- Single- and double-action doors up to 1100 mm leaf width and 150 kg weight
- Hidden horizontal floor installation

PRODUCT FEATURES

- Adjustable closing force of EN1-4
- Can be used for right and left hand doors without conversion
- Closing speed can be individually adjusted
- Hydraulic latching action which accelerates the door shortly before the closed position
- Integrated back check, slows down doors that are thrown open forcefully
- All functions can be adjusted from the top and when installed

VERSIONS

- TS 500 NV with hold-open function: mechanical hold-open function in door closer with hold-open area of 85°/90°/105°/120° **for single-action doors and hold-open area of 90°/95°/110°/125° for double-action doors (not permissible for use on fire and smoke protection doors)**

TECHNICAL DATA FOR FLOOR SPRINGS

	TS 500 NV	TS 500 NV with hold-open function
PRODUCT FEATURES		
Suitability for fire protection doors	yes	no
Use on single-action/double-action door	single-action door, double-action door	
Barrier-free in accordance with DIN 18040 up to leaf width (max.) in mm	1100 mm	–
Type of installation	floor	
Opening angle (max.)	170°	
Closing force acc. to EN 1154	EN 1 – 4	
Leaf width (max.)	1100 mm	
Leaf weight (max.)	150 kg	
DIN/ISO direction	left/right	
Product tested in accordance with	door closer tested acc. to EN 1154	
Length	278 mm	
Overall depth	82 mm	
Height	42 mm	
Length adjustment range for cement box	10 mm	
Width adjustment range for cement box	10 mm	
Height adjustment range for cement box	6 mm	
FUNCTIONS		
Closing force adjustable	yes, with variable adjustment	
Closing speed adjustable	yes	
Latching action adjustable	yes, via valve	
Back check integrated	yes, mechanical, fixed	
Delayed closing integrated	no	
Position of closing force adjustment	top	
Holding open	no	mechanical
Single-action door hold-open area	–	85°, 90°, 105°, 120°
Double-action door hold-open area	–	90°/95°/110°/125°
Safety valve to prevent wilful damage	yes	
Closing sequence control integrated	no	
Thermo-constant valves	yes	
Closing effect from	170°	

● = yes | – = not available

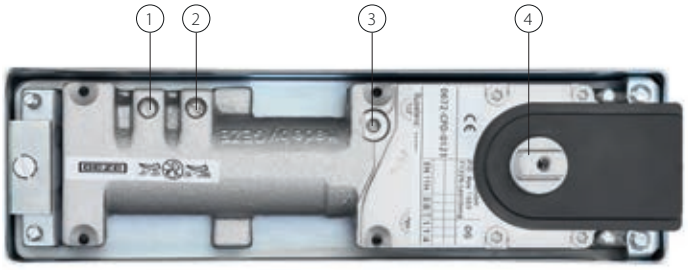

1 = Latching action setting | 2 = Closing speed setting | 3 = Closing force setting | 4 = Frontal gearing pivot

PRODUCT SCALE DRAWING

TS 500 NV

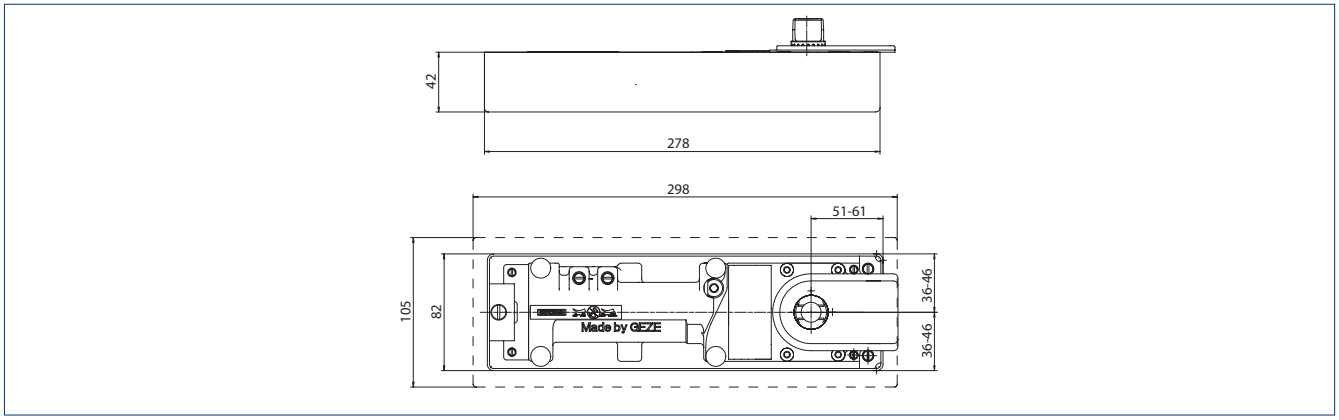

STANDARD INSTALLATION

Example of door rail, upper pivot and floor spring installation on a single-action door (aluminium):

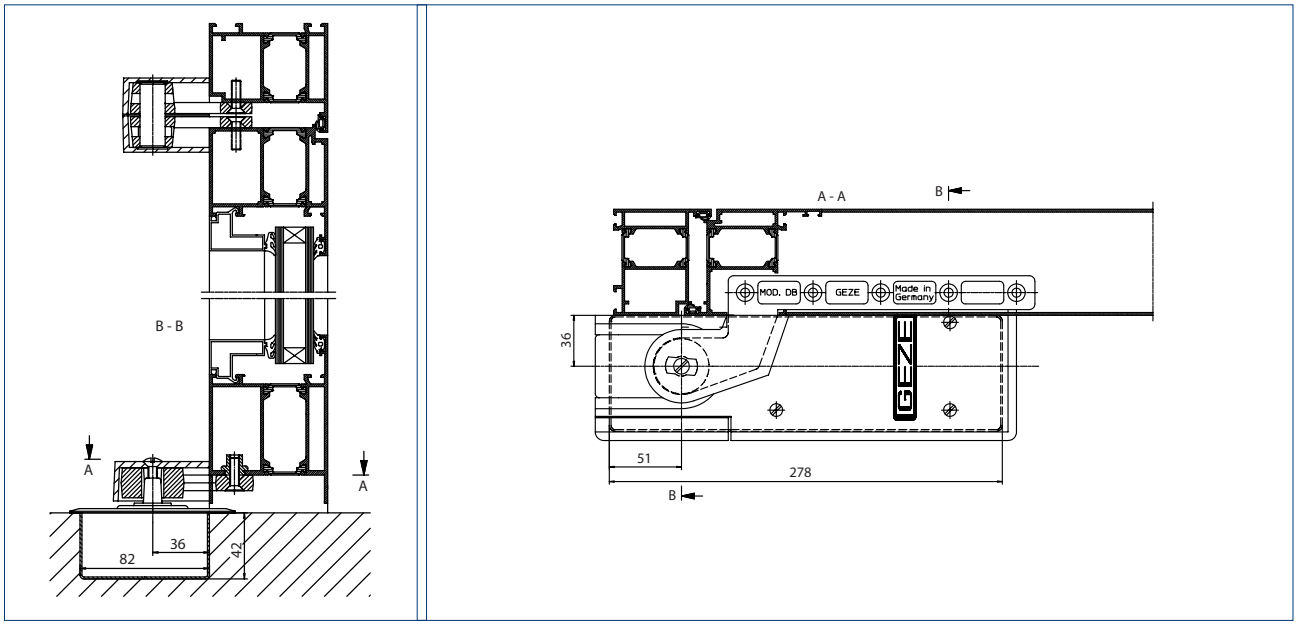

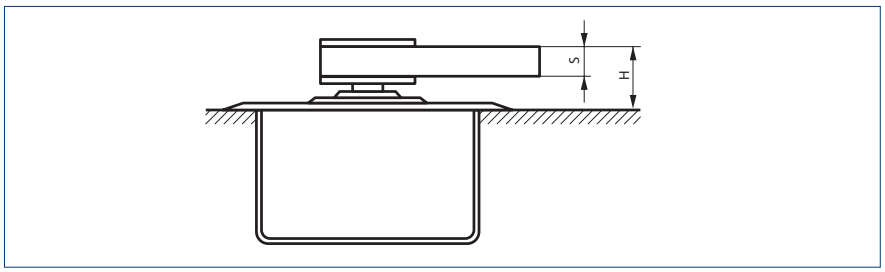

Door rail model DB, EK, FK for single-action doors

H = Installation height dimension

With elongated pivots, the installation height dimension "H" is increased by the respective spindle extension

Model	S	H
DB, EK, FK	10 mm	24 mm

Example of door rail, upper pivot and floor spring installation on a double-action door:

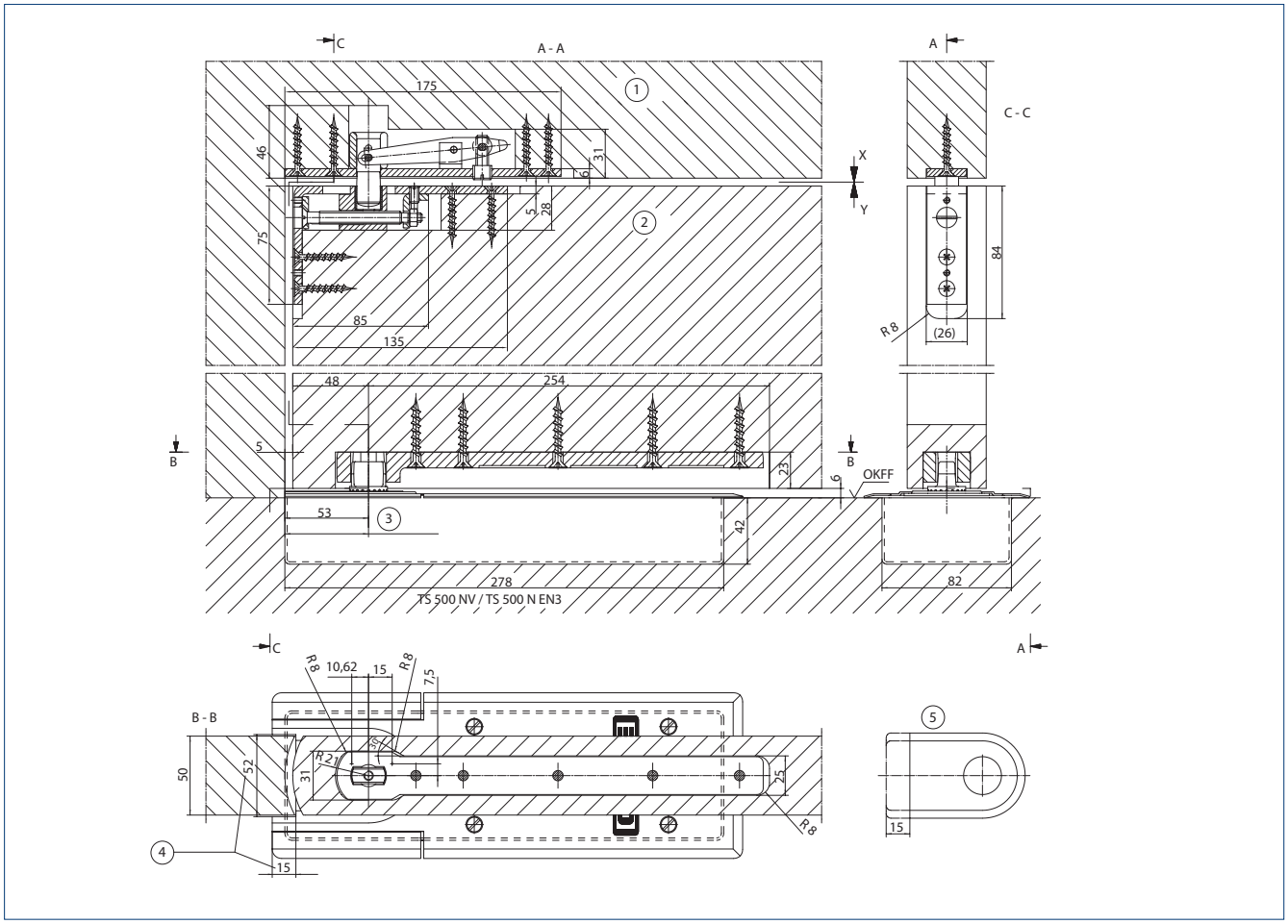

1 = Pivot hinge upper part I 2 = Pivot hinge lower part I 3 = Adjustment range 51 – 61 I 4 = Cover plate notched I 5 = Cover plates - cap shortened I OKFF = Finished floor level

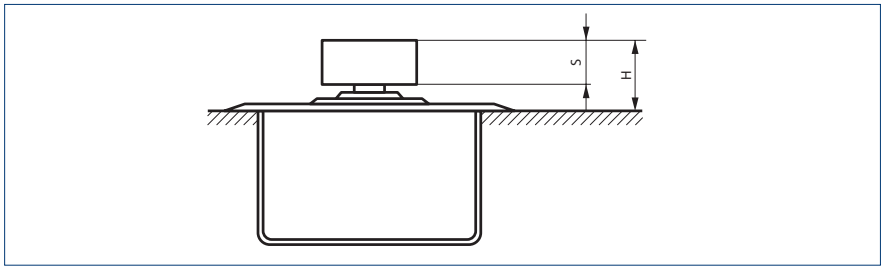

Door rail model CM, C for double-action doors

With elongated pivots, the installation height dimension "H" is increased by the respective spindle extension

Model	S	H
CM	19 mm	29 mm
C	19 mm	29 mm

TS 500 NV – ORDER INFORMATION

Designation	DIN Direction	Hold-open single action	Hold-open double-action	Version	ID no.
TS 500 NV door closer Size EN 1-4, optionally with fixed mechanical hold-open function (without cover plate and accessories)	left/right	0°	0°	silver-coloured	102084
	left/right	85°	90°	silver-coloured	103974
	left/right	90°	95°	silver-coloured	104028
	left/right	105°	110°	silver-coloured	104029
	left/right	120°	125°	silver-coloured	104030
Floor spring cover plate for TS 500 NV / TS 500 N EN3				brass	103012
				stainless steel	102127

TS 500 NV – ORDER INFORMATION

Designation	DIN Direction	Spindle extension	Version	ID no.
ACCESSORIES				
Cover caps for door rails (flush-mounted doors) suitable for models DB, EK, FK	left		stainless steel optic	137586
	left		EV1	006794
	right		stainless steel optic	137577
	right		EV1	006798
Cover caps for door rails (rebated doors) suitable for models DB, EK, FK	left		stainless steel optic	137618
	left		EV1	045196
	right		stainless steel optic	137617
	right		EV1	045155
Cover caps for pivot hinges (flush-mounted doors) suitable for models DB, EK, FK	left/right		EV1	001090
	left/right		stainless steel optic	137640
Cover caps for pivot hinges (rebated doors) suitable for models DB, EK, FK	left		stainless steel optic	137641
	left		EV1	037918
	right		EV1	038302
	right		stainless steel optic	137642
Spindle cap for floor spring [1] with flat cone, including clamping-extension bolt	left/right	0 mm		050644
	left/right	5 mm		010337
	left/right	8 mm		050930
	left/right	10 mm		010338
	left/right	13 mm		052170
	left/right	15 mm		010347
	left/right	20 mm		010372
	left/right	25 mm		010373
	left/right	28 mm		050931
	left/right	30 mm		010374
	left/right	35 mm		010377
	left/right	40 mm		010378
	left/right	45 mm		010381
	left/right	50 mm		010385
Spindle cap for floor spring with square for double-action doors, including clamping-extension bolt		0 mm		053315

TS 500 NV – ORDER INFORMATION

Designation	DIN Direction	Spindle extension	Version	ID no.
Spindle cap for floor spring [1] with square for single-action doors, including clamping-extension bolt	left	0 mm		053954
	right	0 mm		053955
	left	5 mm		053956
	right	5 mm		053957
	left	10 mm		053958
	right	10 mm		053959
	left	15 mm		053960
	right	15 mm		053961
	left	20 mm		053962
	right	20 mm		053963
	left	25 mm		053964
	right	25 mm		053965
Door rail for double-action doors Model C, for metal and timber doors			flat cone	007432
Door rail for double-action doors Model CM, for metal doors, on-site adaptation to profile system, without surface treatment			galvanised	021817
Door rail for double-action doors Model CM, for metal doors, adapted to profile system			flat cone	001067
Door rails for single-action doors Model DB, for rebated & flush-impact metal and wooden doors			flat cone	044579
			square	037581
Door rails for single-action doors Model EK, for welding to steel doors			flat cone	008269
			square	006696
Door rails for single-action doors Model FK, for welding for steel doors			flat cone	008270
			square	006699
Door rail for double-action doors Model S, for welding to steel doors			flat cone	007434
Adjustable pivot hinge for double-action doors Model B, suitable for C, CM, S door rails		pivot pin 43 mm		006371
		pivot pin 55 mm		000108
		pivot pin 65 mm		000903
Adjustable pivot hinge for double-action doors Model C, suitable for C, CM, S door rails		pivot pin 43 mm		006666
		pivot pin 55 mm		000905
		pivot pin 65 mm		000904
Pivot hinge for single-action doors* Model DB, for rebated & flush-impact metal and wooden doors		combination a		044676
		combination b DIN left		044697
		combination b DIN right		044680
		combination c		044787
Pivot hinge for single-action doors* Model EK, for welding to steel doors		combination a		006719
		combination b DIN left		000889
		combination b DIN right		000890
		combination c		000891
Pivot hinge for single-action doors* Model FK, for welding for steel doors		combination a		006724
		combination b DIN left		000895
		combination b DIN right		000896
		combination c		000897

1 It may be necessary to use a longer pivot depending on the installation situation. This is a simple process for all floor-mounted door closer versions in the TS 500 NV/TS 550 NV series by unscrewing the standard pivot and attaching the longer pivot.

*For more detailed information about the combination options see page 35 ff.

TS 500 N EN3



Floor spring for single leaf single and double-action doors of up to 950 mm leaf width with fixed closing force EN3 and with optional hold-open function

AREAS OF APPLICATION

- Fire and smoke protection doors
- Right and left single- and double-action doors
- Single- and double-action doors up to 950 mm leaf width and 100 kg weight
- Hidden horizontal floor installation

PRODUCT FEATURES

- Fixed closing force of EN3
- Can be used for right and left hand doors without conversion
- Closing speed can be individually adjusted
- Hydraulic latching action which accelerates the door shortly before the closed position
- Integrated back check, slows down doors that are thrown open forcefully
- All functions can be adjusted from the top and when installed

VERSIONS

- **TS 500 N EN3 with hold-open function:** with fixed closing force of EN3 **and mechanical hold-open function in the door closer** with hold-open area of 85°/90°/105°/120° **for single-action doors and hold-open area of 90°/95°/110°/125° for double-action doors (not permissible for use on fire and smoke protection doors)**

TECHNICAL DATA FOR FLOOR SPRINGS

	TS 500 N EN3	TS 500 N EN3 with hold-open function
PRODUCT FEATURES		
Suitability for fire protection doors	yes	no
Use on single-action/double-action door	single-action door, double-action door	
Barrier-free in accordance with DIN 18040 up to leaf width (max.) in mm	950 mm	–
Type of installation	floor	
Opening angle (max.)	170°	
Closing force acc. to EN 1154	EN 3	
Leaf width (max.)	950 mm	
Leaf weight (max.)	100 kg	
DIN/ISO direction	left/right	
Product tested in accordance with	door closer tested acc. to EN 1154	
Length	278 mm	
Overall depth	82 mm	
Height	42 mm	
Length adjustment range for cement box	10 mm	
Width adjustment range for cement box	10 mm	
Height adjustment range for cement box	6 mm	
FUNCTIONS		
Closing force adjustable	no	
Closing speed adjustable	yes	
Latching action adjustable	yes, fixed	
Back check integrated	yes, fixed	
Delayed closing integrated	no	
Position of closing force adjustment	top	
Holding open	no	mechanical
Single-action door hold-open area	–	85°, 90°, 105°, 120°
Double-action door hold-open area	–	90°/95°/110°/125°
Safety valve to prevent wilful damage	yes	
Closing sequence control integrated	no	yes
Thermo-constant valves	yes	
Closing effect from	170°	

● = yes | – = not available

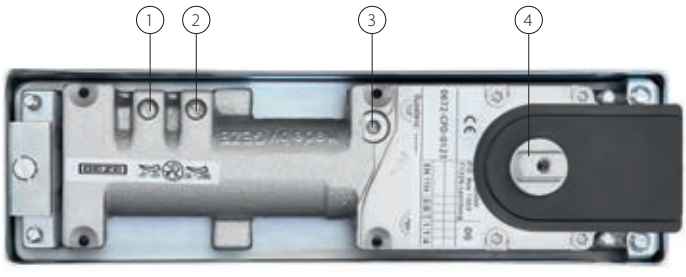

1 = Latching action setting | 2 = Closing speed setting | 3 = Closing force setting | 4 = Frontal gearing pivot

PRODUCT SCALE DRAWING

TS 500 N EN3

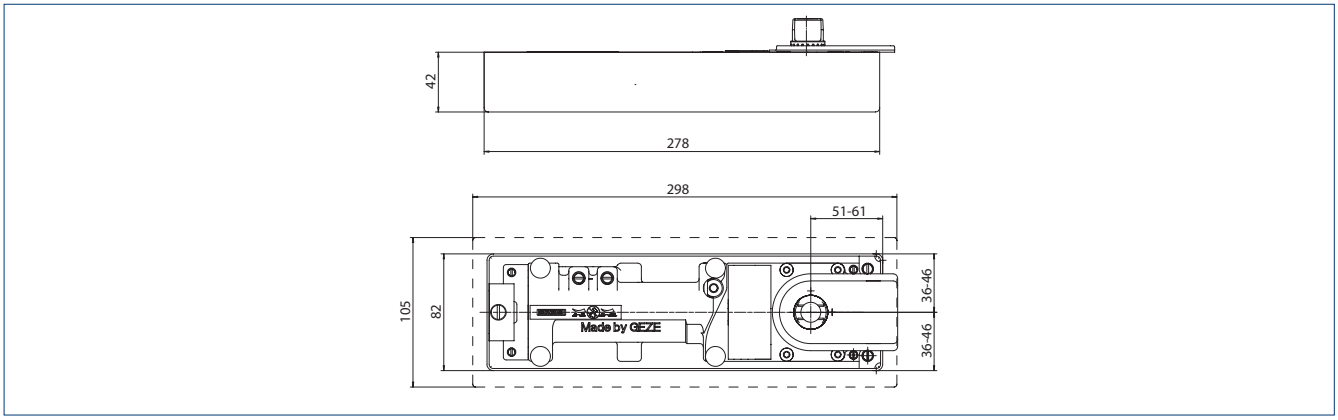

STANDARD INSTALLATION

Example of door rail, upper pivot and floor spring installation on a single-action door (aluminium):

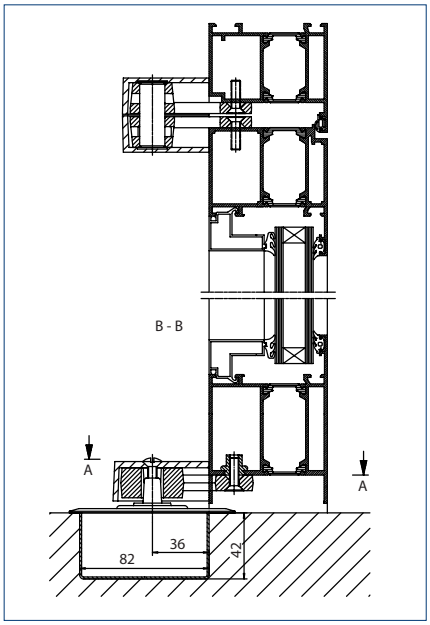

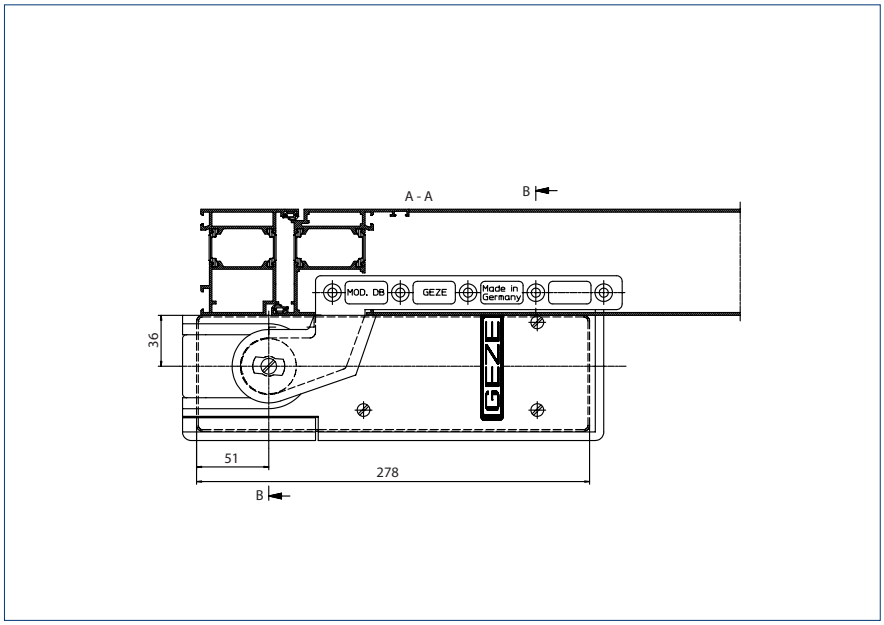

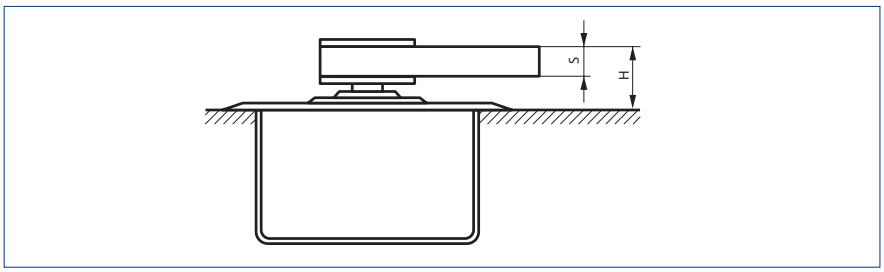

Door rail model DB, EK, FK for single-action doors

H = Installation height dimension

With elongated pivots, the installation height dimension "H" is increased by the respective spindle extension

Model	S	H
DB, EK, FK	10 mm	24 mm

Example of door rail, upper pivot and floor spring installation on a double-action door:

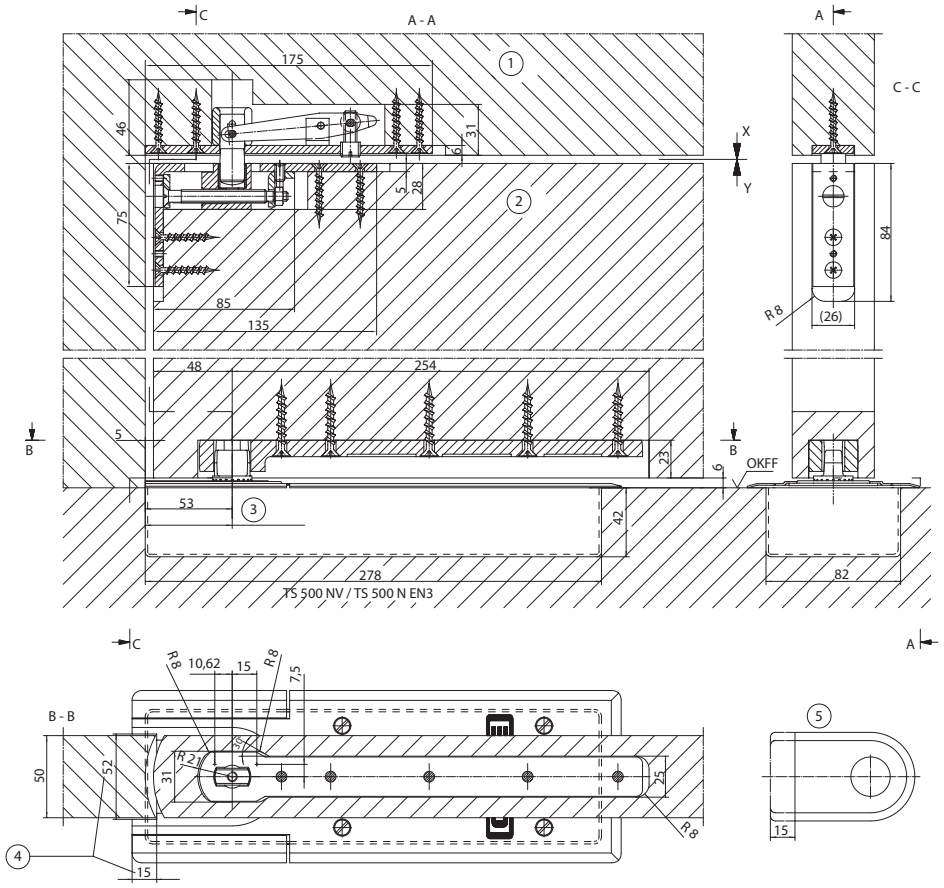

1 = Pivot hinge upper part I 2 = Pivot hinge lower part I 3 = Adjustment range 51 – 61 I 4 = Cover plate notched I 5 = Cover plates - cap shortened I OKFF = Finished floor level

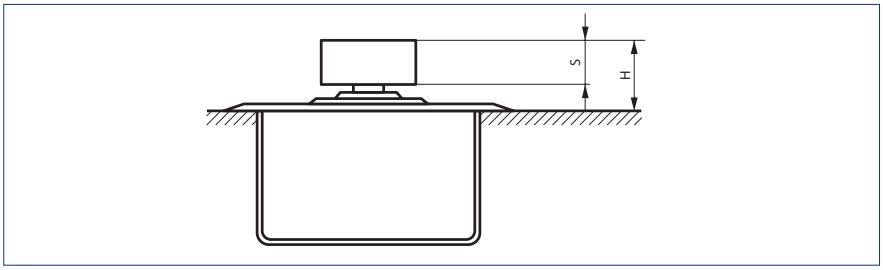

Door rail model CM, C for double-action doors

With elongated pivots, the installation height dimension "H" is increased by the respective spindle extension

Model	S	H
CM	19 mm	29 mm
C	19 mm	29 mm

TS 500 N EN3 – ORDER INFORMATION

Designation	DIN Direction	Hold-open single-action	Hold-open double-action	Version	ID no.
TS 500 N EN3 door closer Size EN 3, optionally with fixed mechanical hold-open function (without cover plate and accessories)	left/right	0°	0°	silver-coloured	103086
	left/right	85°	90°	silver-coloured	104046
	left/right	90°	95°	silver-coloured	104047
	left/right	105°	110°	silver-coloured	111594
	left/right	120°	125°	silver-coloured	111596
Floor spring cover plate for TS 500 NV / TS 500 N EN3				brass	103012
				stainless steel	102127

TS 500 N EN3 – ORDER INFORMATION

Designation	DIN Direction	Spindle extension	Version	ID no.
ACCESSORIES				
Cover caps for door rails (flush-mounted doors) suitable for models DB, EK, FK	left		stainless steel optic	137586
	left		EV1	006794
	right		stainless steel optic	137577
	right		EV1	006798
Cover caps for door rails (rebated doors) suitable for models DB, EK, FK	left		stainless steel optic	137618
	left		EV1	045196
	right		stainless steel optic	137617
	right		EV1	045155
Cover caps for pivot hinges (flush-mounted doors) suitable for models DB, EK, FK	left/right		EV1	001090
	left/right		stainless steel optic	137640
Cover caps for pivot hinges (rebated doors) suitable for models DB, EK, FK	left		stainless steel optic	137641
	left		EV1	037918
	right		EV1	038302
	right		stainless steel optic	137642
Spindle cap for floor spring [1] with flat cone, including clamping-extension bolt	left/right	0 mm		050644
	left/right	5 mm		010337
	left/right	8 mm		050930
	left/right	10 mm		010338
	left/right	13 mm		052170
	left/right	15 mm		010347
	left/right	20 mm		010372
	left/right	25 mm		010373
	left/right	28 mm		050931
	left/right	30 mm		010374
	left/right	35 mm		010377
	left/right	40 mm		010378
	left/right	45 mm		010381
	left/right	50 mm		010385
Spindle cap for floor spring with square for double-action doors, including clamping-extension bolt		0 mm		053315

TS 500 N EN3 – ORDER INFORMATION

Designation	DIN Direction	Spindle extension	Version	ID no.
Spindle cap for floor spring [1] with square for single-action doors, including clamping-extension bolt	left	0 mm		053954
	right	0 mm		053955
	left	5 mm		053956
	right	5 mm		053957
	left	10 mm		053958
	right	10 mm		053959
	left	15 mm		053960
	right	15 mm		053961
	left	20 mm		053962
	right	20 mm		053963
	left	25 mm		053964
	right	25 mm		053965
Door rail for double-action doors Model C, for metal and timber doors			flat cone	007432
Door rail for double-action doors Model CM, for metal doors, on-site adaptation to profile system, without surface treatment			galvanised	021817
Door rail for double-action doors Model CM, for metal doors, adapted to profile system			flat cone	001067
Door rails for single-action doors Model DB, for rebated & flush-impact metal and wooden doors			flat cone	044579
			square	037581
Door rails for single-action doors Model EK, for welding to steel doors			flat cone	008269
			square	006696
Door rails for single-action doors Model FK, for welding for steel doors			flat cone	008270
			square	006699
Door rail for double-action doors Model S, for welding to steel doors			flat cone	007434
Adjustable pivot hinge for double-action doors Model B, suitable for C, CM, S door rails		pivot pin 43 mm		006371
		pivot pin 55 mm		000108
		pivot pin 65 mm		000903
Adjustable pivot hinge for double-action doors Model C, suitable for C, CM, S door rails		pivot pin 43 mm		006666
		pivot pin 55 mm		000905
		pivot pin 65 mm		000904
Pivot hinge for single-action doors* Model DB, for rebated & flush-impact metal and wooden doors		combination a		044676
		combination b DIN left		044697
		combination b DIN right		044680
		combination c		044787
Pivot hinge for single-action doors* Model EK, for welding to steel doors		combination a		006719
		combination b DIN left		000889
		combination b DIN right		000890
		combination c		000891
Pivot hinge for single-action doors* Model FK, for welding for steel doors		combination a		006724
		combination b DIN left		000895
		combination b DIN right		000896
		combination c		000897

1 It may be necessary to use a longer pivot depending on the installation situation. This is a simple process for all floor-mounted door closer versions in the TS 500 NV/TS 550 NV series by unscrewing the standard pivot and attaching the longer pivot.

*For more detailed information about the combination options see page 35 ff.

TS 550 NV



Floor spring for single leaf single and double-action doors of up to 1400 mm leaf width with adjustable closing force EN 3-6 and with hold-open function that can be switched on and off

AREAS OF APPLICATION

- Right and left single- and double-action doors
- Single- and double-action doors up to 1400 mm leaf width and 300 kg weight
- Highly frequented and heavy doors
- Hidden horizontal floor installation

PRODUCT FEATURES

- Closing force of EN3-6 with variable adjustment
- Can be used for right and left hand doors without conversion
- Adjustable delayed closing action, for adjusting the closing speed of the door up to an opening angle of approx. 80°
- Mechanical hold-open function in door closer with hold-open area of 80°-165°
- Hydraulic latching action which accelerates the door shortly before the closed position
- Closing speed can be individually adjusted
- Integrated back check, slows down doors that are thrown open forcefully
- All functions can be adjusted from the top and when installed

TECHNICAL DATA FOR FLOOR SPRINGS

	TS 550 NV
PRODUCT FEATURES	
Use on single-action/double-action door	single-action door/double-action door
Closing force acc. to EN 1154	EN 3 – 6
Leaf width recommended up to	1400 mm
Leaf weight (max.)	300 kg
Door stop DIN direction	left/right
Product tested in accordance with	door closer tested acc. to EN 1154
Length	342 mm
Overall depth	82 mm
Height	54 mm
Length adjustment range for cement box	9 mm
Width adjustment range for cement box	10 mm
Height adjustment range for cement box	6 mm
FUNCTIONS	
Closing force adjustable	yes, with variable adjustment
Closing speed adjustable	yes
Latching action adjustable	yes, via valve
Back check integrated	yes, mechanical, fixed
Delayed closing integrated	yes
Position of closing force adjustment	Top
Safety valve to prevent wilful damage	yes
Thermo-constant valves	yes
Closing effect from	170°
Holding open	mechanical
Hold-open unit can be switched on and off	yes
Hold-open unit can be overridden	yes

● = yes | – = not available



1 = Latching action setting | 2 = Closing speed setting | 3 = Hold-open function setting / closing delay | 4 = Closing force setting | 5 = Frontal gearing pivot

PRODUCT SCALE DRAWING

TS 550 NV

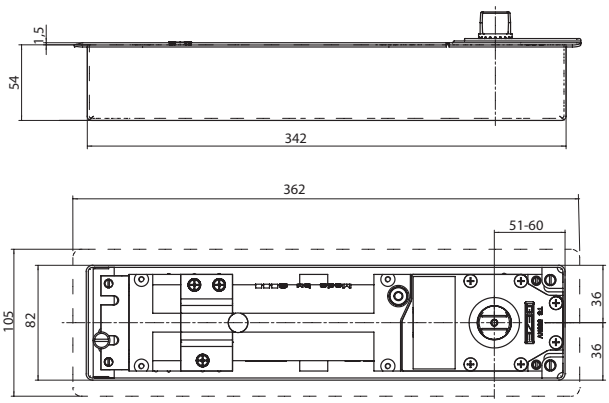

STANDARD INSTALLATION

Example of door rail and floor spring installation on a single-action door (aluminium):

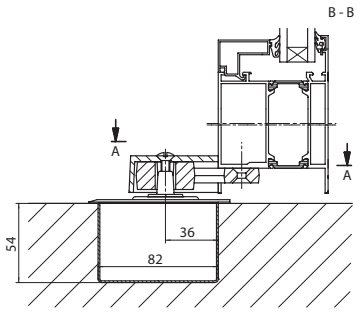

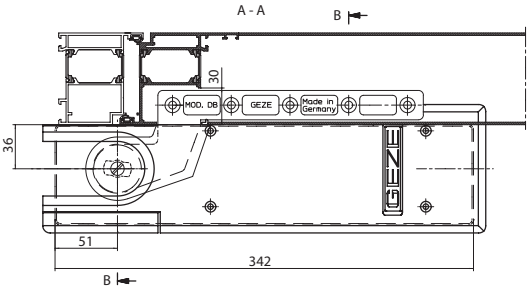

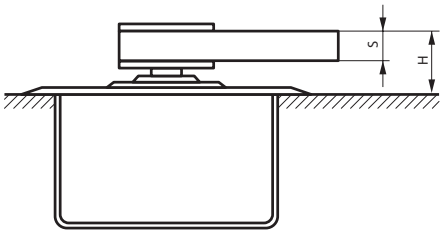

Door rail model DB, EK, FK for single-action doors

H = Installation height dimension

With elongated pivots, the installation height dimension "H" is increased by the respective spindle extension

Model	S	H
DB, EK, FK	10 mm	24 mm

Example of door rail, upper pivot and floor spring installation on a double-action door:

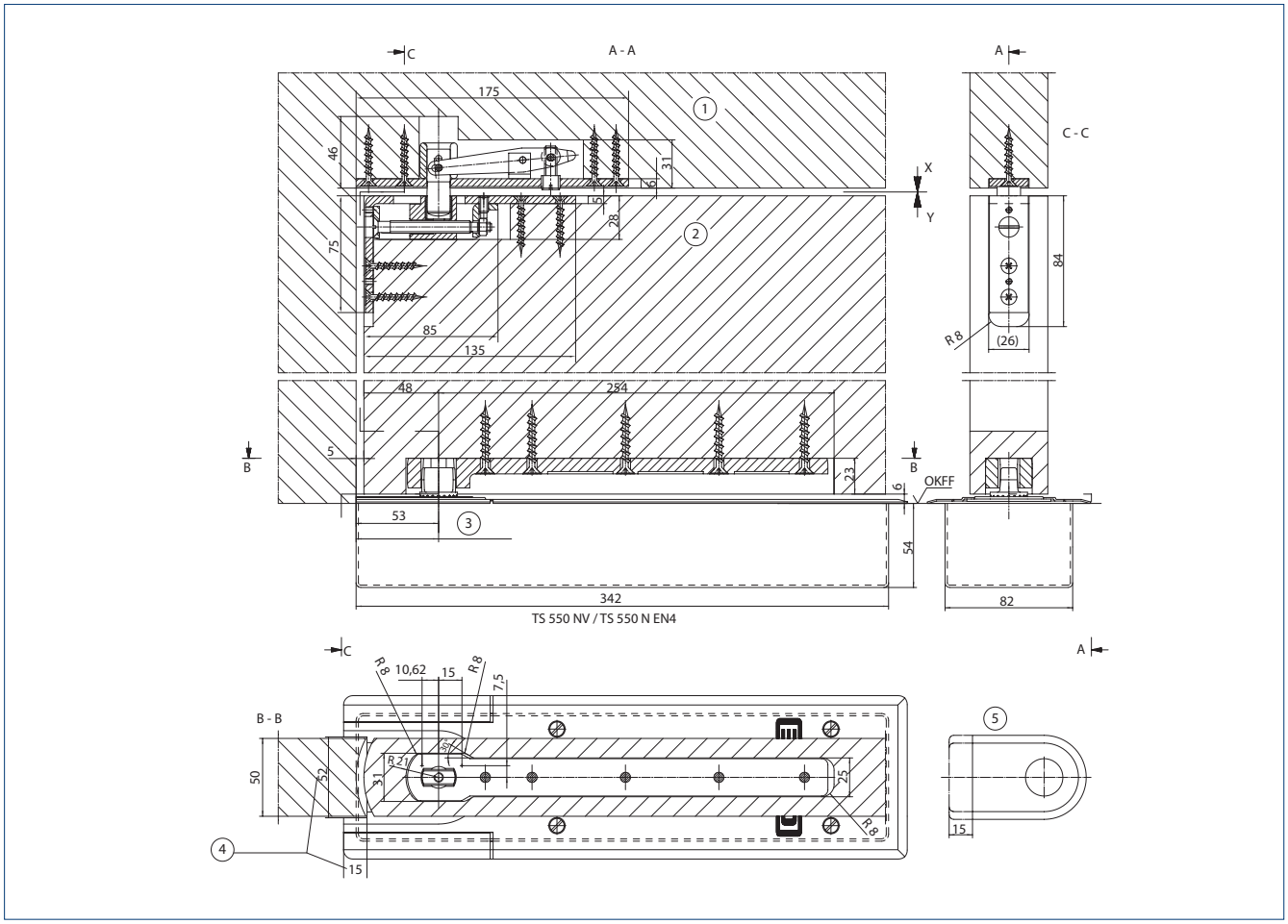

1 = Pivot hinge upper part I 2 = Pivot hinge lower part I 3 = Adjustment range 51 – 60 I 4 = Cover plate notched I 5 = Cover plates - cap shortened I OKFF = Finished floor level

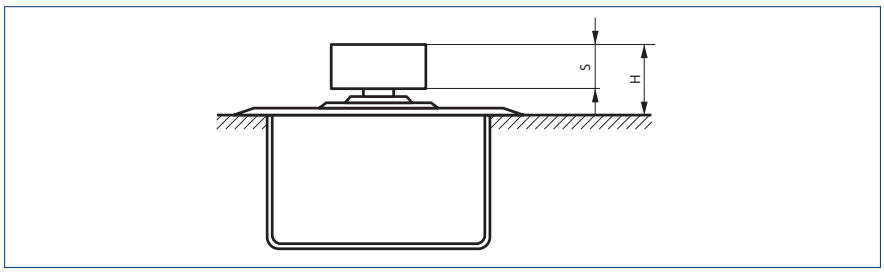

Door rail model CM, C for double-action doors

With elongated pivots, the installation height dimension "H" is increased by the respective spindle extension

Model	S	H
CM	19 mm	29 mm
C	19 mm	29 mm

TS 550 NV – ORDER INFORMATION

Designation	DIN Direction	Axle extension	Version	ID no.
TS 550 NV door closer[1] Size EN 3-6, with integrated hold-open function, hold-open area 85°– 165°, can be switched on/off, alternatively delayed closing possible, door leaf weight to 300 kg (without cover plate and accessories)	left/right		silver-coloured	123950
Floor spring cover plate for TS 550 NV / TS 550 NV F			brass	125890
			stainless steel	125888
ACCESSORIES				
Cover caps for door rails (flush-mounted doors) suitable for models DB, EK, FK	left		stainless steel optic	137586
	left		EV1	006794
	right		stainless steel optic	137577
	right		EV1	006798
Cover caps for door rails (rebated doors) suitable for models DB, EK, FK	left		stainless steel optic	137618
	left		EV1	045196
	right		stainless steel optic	137617
	right		EV1	045155
Cover caps for pivot hinges (flush-mounted doors) suitable for models DB, EK, FK	left/right		stainless steel optic	137640
	left/right		EV1	001090
Cover caps for pivot hinges (rebated doors) suitable for models DB, EK, FK	left		stainless steel optic	137641
	left		EV1	037918
	right		stainless steel optic	137642
	right		EV1	038302
Spindle cap for floor spring [2] with flat cone, including clamping-extension bolt	left/right	0 mm		050644
	left/right	5 mm		010337
	left/right	8 mm		050930
	left/right	10 mm		010338
	left/right	13 mm		052170
	left/right	15 mm		010347
	left/right	20 mm		010372
	left/right	25 mm		010373
	left/right	28 mm		050931
	left/right	30 mm		010374
	left/right	35 mm		010377
	left/right	40 mm		010378
	left/right	45 mm		010381
	left/right	50 mm		010385
Spindle cap for floor spring with square for double-action doors, including clamping-extension bolt		0 mm		053315
Spindle cap for floor spring [2] with square for single-action doors, including clamping-extension bolt	left	0 mm		053954
	right	0 mm		053955
	left	5 mm		053956
	right	5 mm		053957
	left	10 mm		053958
	right	10 mm		053959
	left	15 mm		053960
	right	15 mm		053961
	left	20 mm		053962
	right	20 mm		053963
	left	25 mm		053964
	right	25 mm		053965

TS 550 NV – ORDER INFORMATION

Designation	DIN Direction	Axle extension	Version	ID no.
Door rail for double-action doors Model C, for metal and timber doors			flat cone	007432
Door rail for double-action doors Model CM, for metal doors, on-site adaptation to profile system, without surface treatment			galvanised	021817
Door rail for double-action doors Model CM, for metal doors, adapted to profile system			flat cone	001067
Door rails for single-action doors Model DB, for rebated & flush-impact metal and wooden doors			flat cone	044579
			square	037581
Door rails for single-action doors Model EK, for welding to steel doors			flat cone	008269
			square	006696
Door rails for single-action doors Model FK, for welding for steel doors			flat cone	008270
			square	006699
Door rail for double-action doors Model S, for welding to steel doors			flat cone	007434
Adjustable pivot hinge for double-action doors Model B, suitable for C, CM, S door rails		pivot pin 43 mm		006371
		pivot pin 55 mm		000108
		pivot pin 65 mm		000903
Adjustable pivot hinge for double-action doors Model C, suitable for C, CM, S door rails		pivot pin 43 mm		006666
		pivot pin 55 mm		000905
		pivot pin 65 mm		000904
Pivot hinge for single-action doors* Model DB, for rebated & flush-impact metal and wooden doors		combination a		044676
		combination b DIN left		044697
		combination b DIN right		044680
		combination c		044787
Pivot hinge for single-action doors* Model EK, for welding to steel doors		combination a		006719
		combination b DIN left		000889
		combination b DIN right		000890
		combination c		000891
Pivot hinge for single-action doors* Model FK, for welding for steel doors		combination a		006724
		combination b DIN left		000895
		combination b DIN right		000896
		combination c		000897

1 Use on fire protection doors not permissible

2 It may be necessary to use a longer pivot depending on the installation situation. This is a simple process for all floor-mounted door closer versions in the TS 500 NV/TS 550 NV series by unscrewing the standard pivot and attaching the longer pivot.

*For more detailed information about the combination options see page 35 ff.

TS 550 NV F



Floor spring for single leaf doors up to 1400 mm leaf width with hold-open function that can be switched on and off

AREAS OF APPLICATION

- Fire and smoke protection doors
- Right and left single- and double-action doors
- Single- and double-action doors up to 1400 mm leaf width and 300 kg weight
- Highly frequented and heavy doors
- Hidden horizontal floor installation

PRODUCT FEATURES

- Closing force of EN3-6 with variable adjustment
- Can be used for right and left hand doors without conversion
- Adjustable delayed closing action, for adjusting the closing speed of the door up to an opening angle of approx. 80°
- Hydraulic latching action which accelerates the door shortly before the closed position
- Closing speed can be individually adjusted
- Integrated back check, slows down doors that are thrown open forcefully
- All functions can be adjusted from the top and when installed

TECHNICAL DATA FOR FLOOR SPRINGS

	TS 550 NV F
PRODUCT FEATURES	
Use on single-action/double-action door	single-action door
Closing force acc. to EN 1154	3 – 6
Leaf width recommended up to	1400 mm
Leaf weight (max.)	300 kg
Door stop DIN direction	left/right
Product tested in accordance with	door closer tested acc. to EN 1154
Length	342 mm
Overall depth	82 mm
Height	54 mm
Length adjustment range for cement box	9 mm
Width adjustment range for cement box	10 mm
Height adjustment range for cement box	6 mm
FUNCTIONS	
Closing force adjustable	yes, with variable adjustment
Closing speed adjustable	●
Latching action adjustable	yes, via valve
Back check integrated	yes, mechanical, fixed
Delayed closing integrated	●
Position of closing force adjustment	Top
Safety valve to prevent wilful damage	●
Thermo-constant valves	●
Closing effect from	180°
Holding open	no

● = yes | – = not available

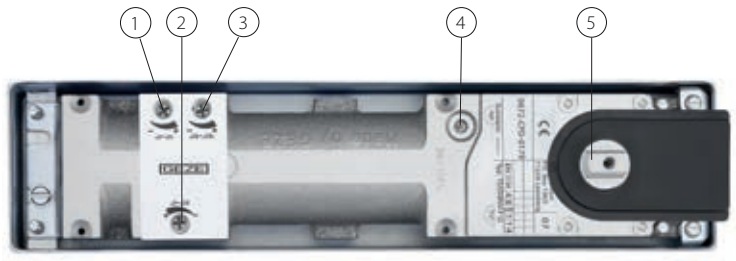

1 = Latching action setting | 2 = Closing speed setting | 3 = open Closing delay setting | 4 = Closing force setting | 5 = Frontal gearing pivot

PRODUCT SCALE DRAWING

TS 550 NV F

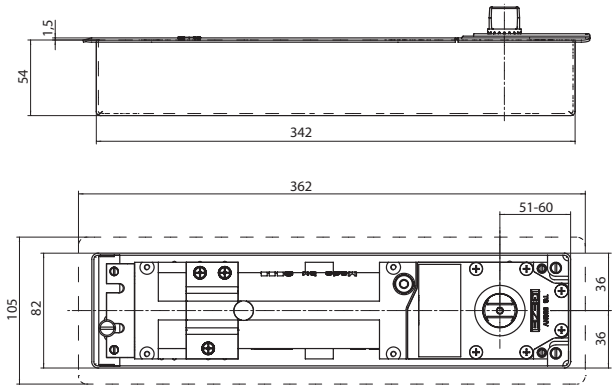

STANDARD INSTALLATION

Example of door rail and floor spring installation on a single-action door (aluminium):

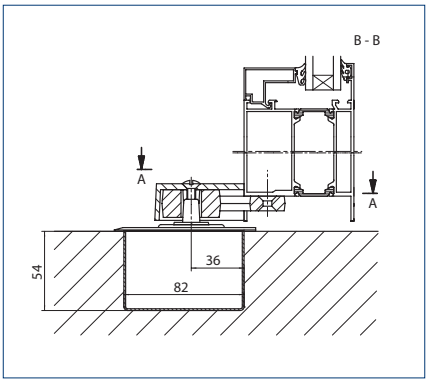

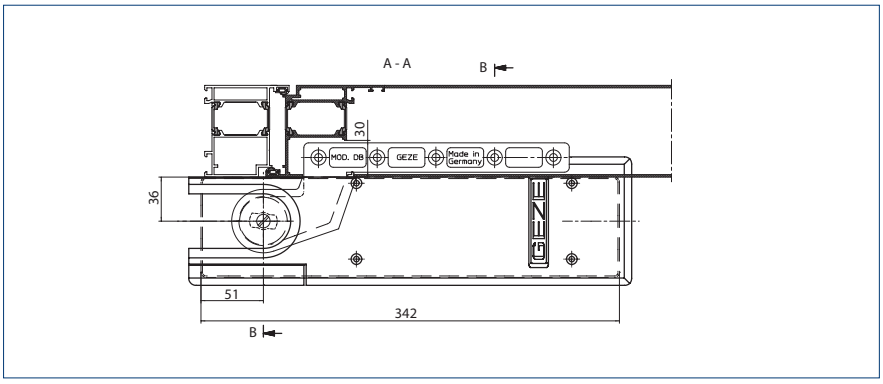

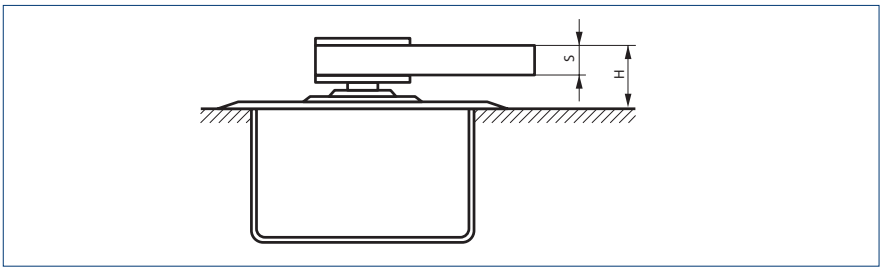

Door rail model DB, EK, FK for single-action doors

H = Installation height dimension

With elongated pivots, the installation height dimension "H" is increased by the respective spindle extension

Model	S	H
DB, EK, FK	10 mm	24 mm

TS 550 NV F – ORDER INFORMATION

Designation	DIN Direction	Spindle extension	Version	ID no.
TS 550 NV F door closer Size EN 3–6, closing effect from 180°, without hold-open function, delayed closing possible, door leaf weight up to 300 kg (without cover plate and accessories)	left		silver-coloured	132755
	right		silver-coloured	132754
Floor spring cover plate for TS 550 NV / TS 550 NV F / TS 550 NV E			brass	125890
			stainless steel	125888
ACCESSORIES				
Cover caps for door rails (flush-mounted doors) suitable for models DB, EK, FK	left		stainless steel optic	137586
	left		EV1	006794
	left		aluminium, matt	006792
	right		stainless steel optic	137577
	right		EV1	006798
	right		aluminium, matt	006796
Cover caps for door rails (rebated doors) suitable for models DB, EK, FK	left		stainless steel optic	137618
	left		EV1	045196
	left		aluminium, matt	045184
	right		stainless steel optic	137617
	right		EV1	045155
	right		aluminium, matt	045011
Cover caps for pivot hinges (flush-mounted doors) suitable for models DB, EK, FK	left/right		stainless steel optic	137640
	left/right		EV1	001090
	left/right		aluminium, matt	001089
Cover caps for pivot hinges (rebated doors) suitable for models DB, EK, FK	left		stainless steel optic	137641
	left		EV1	037918
	left		aluminium, matt	037917
	right		stainless steel optic	137642
	right		EV1	038302
	right		aluminium, matt	038284
Spindle cap for floor spring [1 2] with flat cone, including clamping-extension bolt	left/right	0 mm		050644
	left/right	5 mm		010337
	left/right	8 mm		050930
	left/right	10 mm		010338
	left/right	13 mm		052170
	left/right	15 mm		010347
	left/right	20 mm		010372
	left/right	25 mm		010373
	left/right	28 mm		050931
	left/right	30 mm		010374
	left/right	35 mm		010377
	left/right	40 mm		010378
	left/right	45 mm		010381
	left/right	50 mm		010385

TS 550 NV F – ORDER INFORMATION

Designation	DIN Direction	Spindle extension	Version	ID no.
Spindle cap for floor spring [1] [2] with square for single-action doors, including clamping-extension bolt	left	0 mm		053954
	right	0 mm		053955
	left	5 mm		053956
	right	5 mm		053957
	left	10 mm		053958
	right	10 mm		053959
	left	15 mm		053960
	right	15 mm		053961
	left	20 mm		053962
	right	20 mm		053963
	left	25 mm		053964
	right	25 mm		053965
Door rails for single-action doors Model DB, for rebated & flush-impact metal and wooden doors			flat cone	044579
			square	037581
Door rails for single-action doors Model EK, for welding to steel doors			flat cone	008269
			square	006696
Door rails for single-action doors Model FK, for welding for steel doors			flat cone	008270
			square	006699
Pivot hinge for single-action doors* Model DB, for rebated & flush-impact metal and wooden doors		combination a		044676
		combination b DIN left		044697
		combination b DIN right		044680
		combination c		044787
Pivot hinge for single-action doors* Model EK, for welding to steel doors		combination a		006719
		combination b DIN left		000889
		combination b DIN right		000890
		combination c		000891
Pivot hinge for single-action doors* Model FK, for welding for steel doors		combination a		006724
		combination b DIN left		000895
		combination b DIN right		000896
		combination c		000897

1 It may be necessary to use a longer pivot depending on the installation situation. This is a simple process for all floor-mounted door closer versions in the TS 500 NV/TS 550 NV series by unscrewing the standard pivot and attaching the longer pivot.

2 Only permissible for fire and smoke protection doors when this use is included in the approval certificate for the door.

*For more detailed information about the combination options see page 35 ff.



TS 550 NV F, HafenCity University, Hamburg, Germany (photo: Stefan Dauth)



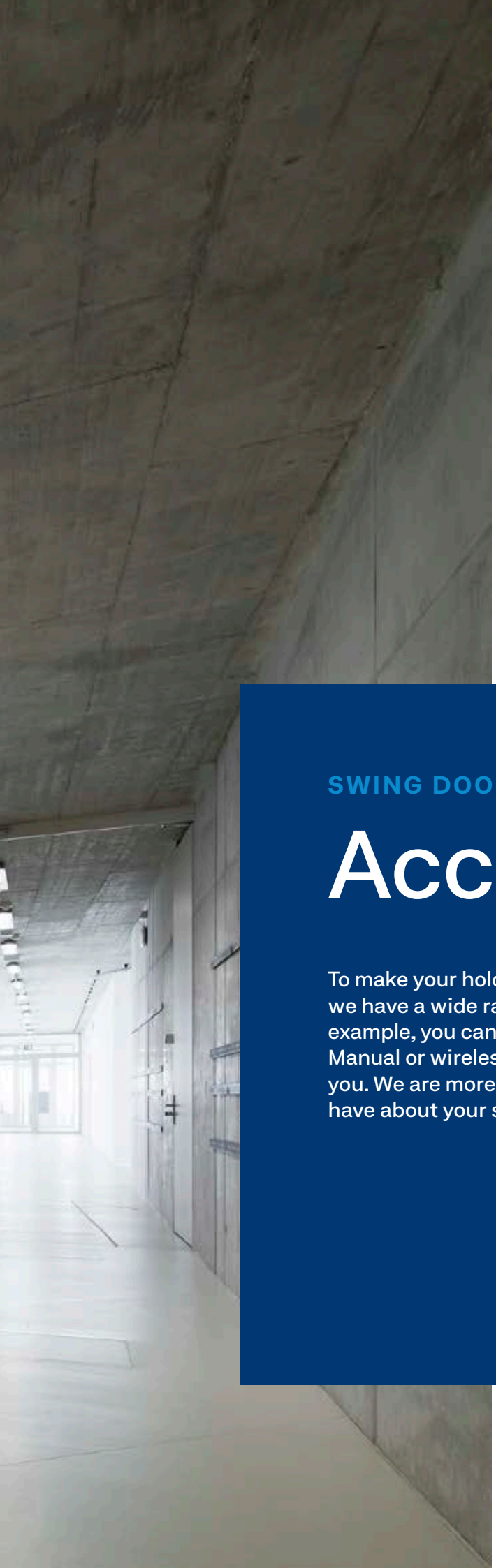

SWING DOORS

Accessories

To make your hold-open devices even safer in an emergency, we have a wide range of accessories in our product range. For example, you can opt for a GEZE smoke switch control unit. Manual or wireless – we have numerous versions on offer for you. We are more than happy to answer any questions you may have about your safe door.

TS 137b / TS 32 b floor-mounted pivot bearing and cover plate

WITH FLAT CONICAL SPINDLE, MAX. DOOR WEIGHT 250 KG, 75 X 70 MM WITH REINFORCEMENT PLATE



Pivot bearing with flat conical spindle

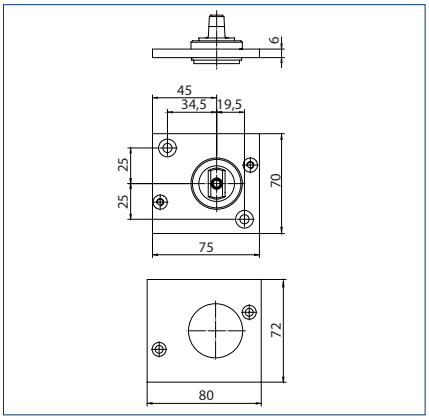

Pivot bearing with flat conical spindle

FLOOR-MOUNTED PIVOT BEARINGS AND COVER PLATES – ORDER INFORMATION

Designation	Spindle extension	Version	ID no.
TS 137 b floor-mounted pivot bearing with flat conical spindle, max. door weight 250 kg, 75x70 mm with reinforcement plate	0 mm	silver-coloured	009788
	5 mm	silver-coloured	009790
TS 32 b floor-mounted pivot bearing with square spindle, door weight max. 250 kg, 75 x 70 mm with thrust bearing	0 mm	silver-coloured	010556
	5 mm	silver-coloured	010564
Cover plate for floor-mounted pivot bearing for type TS 137 b and TS 32 b		stainless steel	012846

Door rail and pivot hinge for single-action doors

DOOR RAIL AND PIVOT HINGE DB FOR SINGLE-ACTION DOORS



Door rail model DB

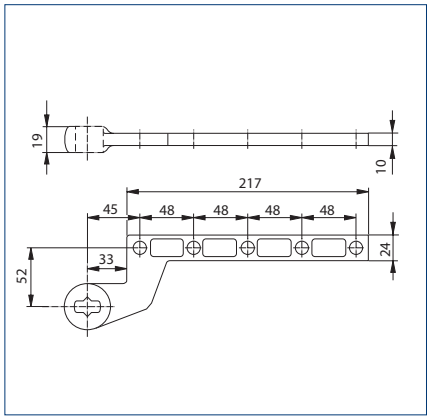

Door rail model DB



Pivot hinge model DB

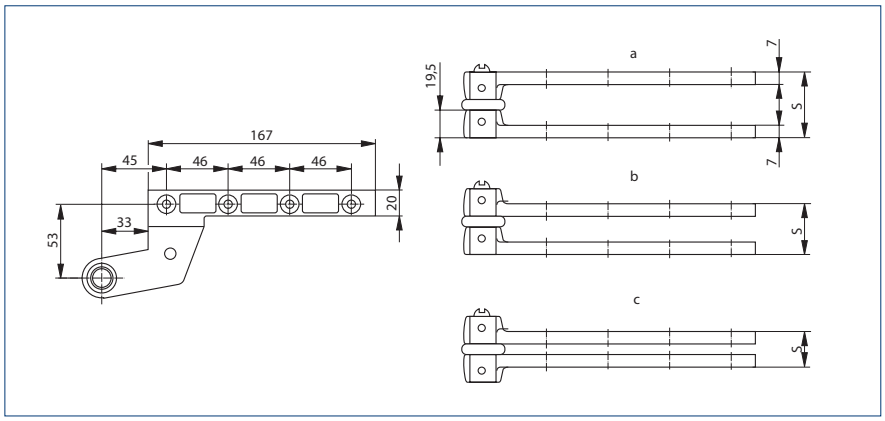

Pivot hinge model DB

INSTALLATION DIMENSIONS	COMBINATION		
	a	b	c
Dimension =	**S**	**S**	**S**
Pivot pin 41 mm without intermediate ring	41	28.5	16
Pivot pin 45 mm without intermediate ring	45	32.5	20
Pivot pin 49 mm without intermediate ring	49	36.5	24

Standard version with 45 mm pivot pin. 41 mm and 49 mm pivot pins must be ordered separately.

DOOR RAIL AND PIVOT HINGE DB FOR SINGLE-ACTION DOORS – ORDER INFORMATION

Designation		Version	ID no.
Door rail for single-action doors Model DB, for rebated & flush-mounted metal and timber doors [1]	flat cone	galvanised	044579
	square	galvanised	037581
Pivot hinge for single-action doors Model DB, for rebated & flush-mounted metal and timber doors [1]	combination a	galvanised	044676
	combination b DIN left	galvanised	044697
	combination b DIN right	galvanised	044680
	combination c	galvanised	044787

1 standard length of pivot pin = 45 mm

Door rail and pivot hinge for single-action doors

DOOR RAIL AND PIVOT HINGE EK FOR SINGLE-ACTION DOORS



Door rail model EK

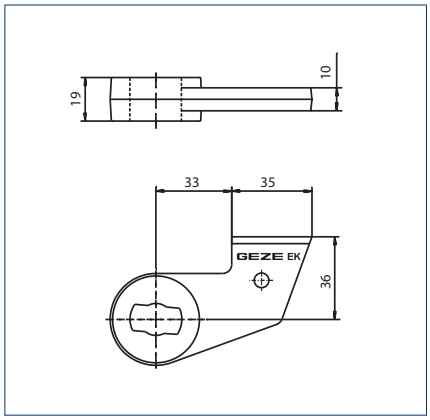

Door rail model EK



Pivot hinge model EK

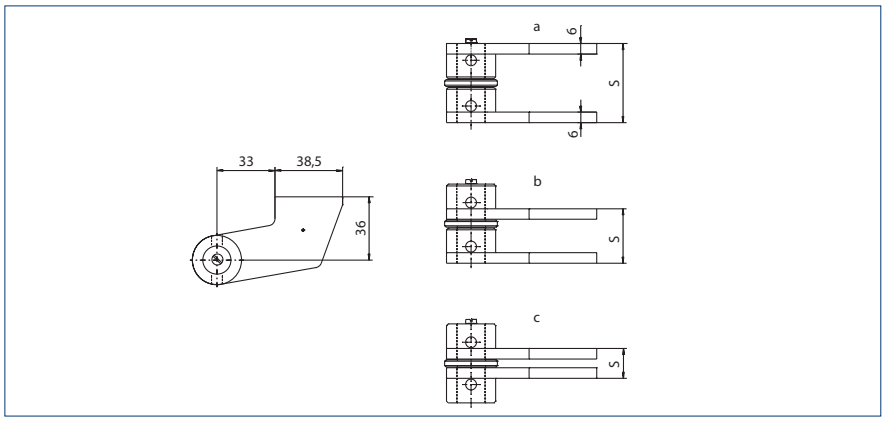

Pivot hinge model EK

INSTALLATION DIMENSIONS

COMBINATION

	a	b	c
Dimension =	**S**	**S**	**S**
Pivot pin 41 mm without intermediate ring	41	27	13
Pivot pin 45 mm without intermediate ring	45	31	17
Pivot pin 49 mm without intermediate ring	49	35	21

Standard version with 45 mm pivot pin.
41 mm and 49 mm pivot pins must be ordered separately.

DOOR RAIL AND PIVOT HINGE EK FOR SINGLE-ACTION DOORS – ORDER INFORMATION

Designation		Version	ID no.
Door rail for single-action doors Model EK, for welding to steel doors [1]	flat cone	phosphated	008269
	square	phosphated	006696
Pivot hinge for single-action doors Model EK, for welding to steel doors [1]	combination b DIN left	phosphated	006719
	combination b DIN left	phosphated	000889
	combination b DIN left	phosphated	000890
	combination b DIN left	phosphated	000891

1 standard length of pivot pin = 45 mm

Door rail and pivot hinge for single-action doors

DOOR RAIL AND PIVOT HINGE FK FOR SINGLE-ACTION DOORS



Door rail model FK

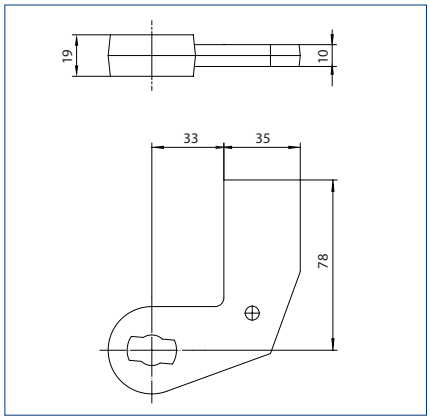

Door rail model FK



Pivot hinge model FK

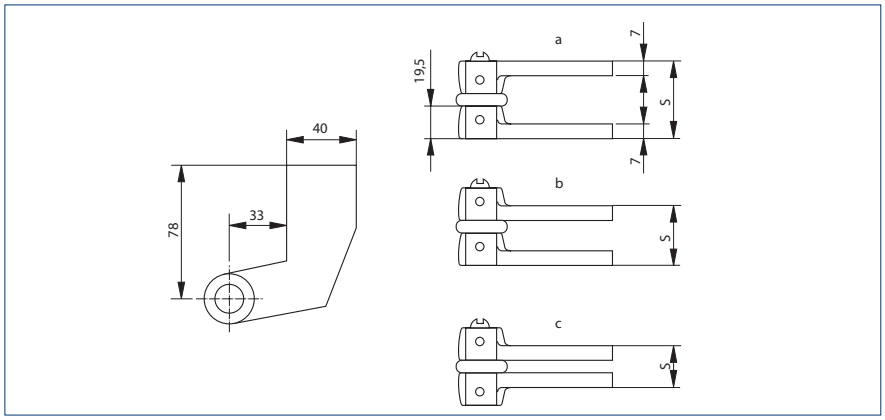

Pivot hinge model FK

INSTALLATION DIMENSIONS

COMBINATION

	a	b	c
Dimension =	**S**	**S**	**S**
Pivot pin 41 mm without intermediate ring	41	28	15
Pivot pin 45 mm without intermediate ring	45	32	19
Pivot pin 49 mm without intermediate ring	49	36	23

Standard version with 45 mm pivot pin.
41 mm and 49 mm pivot pins must be ordered separately.

DOOR RAIL AND PIVOT HINGE FK FOR SINGLE-ACTION DOORS – ORDER INFORMATION

Designation		Version	ID no.
Door rail for single-action doors Model FK, for welding for steel doors [1]	flat cone	phosphated	008270
	square	phosphated	006699
Pivot hinge for single-action doors Model FK, for welding for steel doors [1]	combination a	phosphated	006724
	combination b DIN left	phosphated	000895
	combination b DIN right	phosphated	000896
	combination c	phosphated	000897

1 standard length of pivot pin = 45 mm

Cover caps for door rails (flush-mounted and rebated doors)

SUITABLE FOR MODELS DB, EK, FK



Cover cap, right

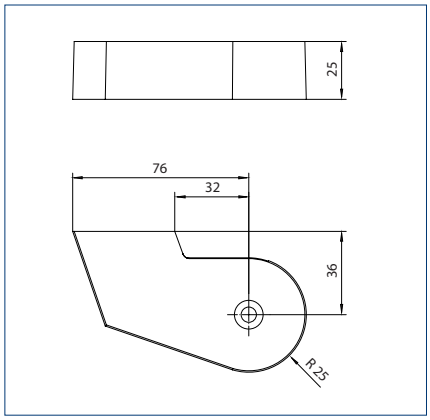

Cover caps for door rail models DB, EK, FK

COVER CAPS FOR DOOR RAILS – ORDER INFORMATION

Designation	DIN/ISO direction	Version	ID no.
Cover caps for door rails (flush-mounted doors) suitable for models DB, EK, FK	left	stainless steel optic	137586
	left	EV1	006794
	right	stainless steel optic	137577
	right	EV1	006798
Cover caps for door rails (rebated doors) suitable for models DB, EK, FK [1]	left	stainless steel optic	137618
	left	EV1	045196
	right	stainless steel optic	137617
	right	EV1	045155

1 The cover caps for the door rails and the pivot hinge lower part are ground by 14 mm for installation on rebated doors.

Cover caps for pivot hinges (flush-mounted and rebated doors)

SUITABLE FOR MODELS DB, EK, FK



Cover cap, right

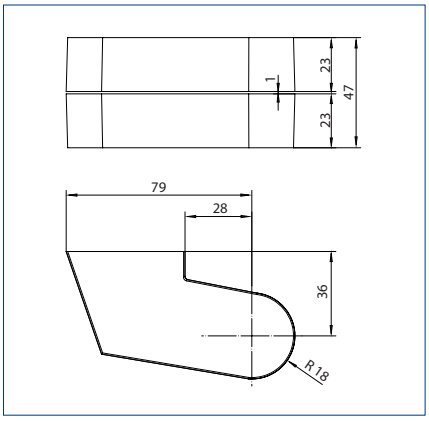

Cover caps for pivot hinge models DB, EK, FK

COVER CAPS FOR PIVOT HINGES – ORDER INFORMATION

Designation	DIN/ISO direction	Version	ID no.
Cover caps for pivot hinges (flush-mounted doors) suitable for models DB, EK, FK	left/right	EV1	001090
	left/right	stainless steel optic	137640
Cover caps for pivot hinges (rebated doors) suitable for models DB, EK, FK [1]	left	stainless steel optic	137641
	left	EV1	037918
	right	EV1	038302
	right	stainless steel optic	137642

1 The cover caps for the door rails and the pivot hinge lower part are ground by 14 mm for installation on rebated doors.

Door rails for double-action doors

MODELS CM, C AND S



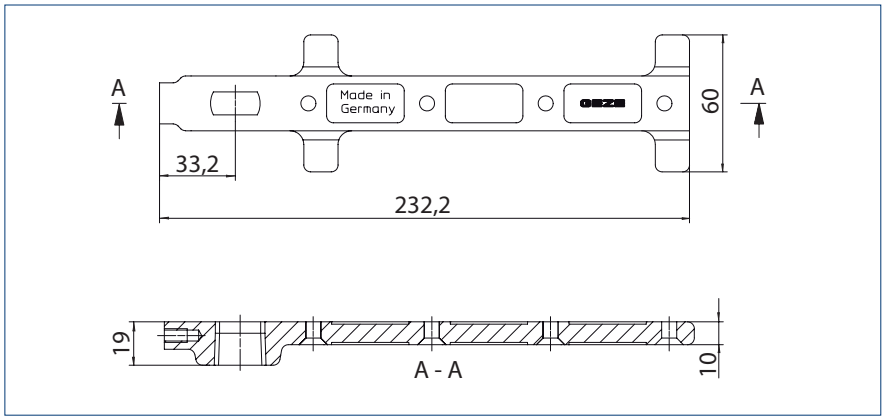

Door rail model CM



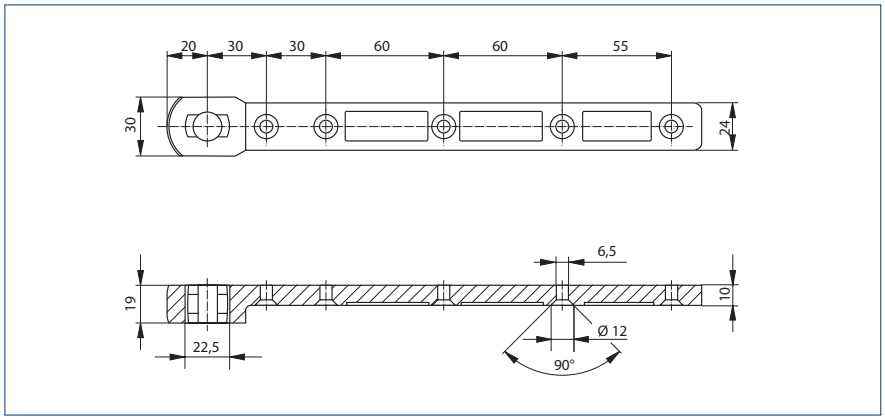

Door rail model C

Door rail model C



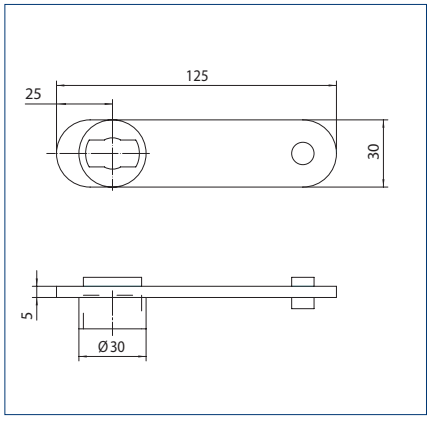

Door rail model S

Door rail model S

DOOR RAILS FOR DOUBLE-ACTION DOORS – ORDER INFORMATION

Designation		Version	ID no.
Door rail for double-action doors Model CM, for metal doors, on-site adaptation to profile system, without surface treatment		galvanised	021817
Door rail for double-action doors Model CM, for metal doors, adapted to profile system [1]	flat cone	galvanised	001067
Door rail for double-action doors Model C, for metal and timber doors	flat cone	galvanised	007432
Door rail for double-action doors Model S, for welding to steel doors	flat cone	phosphated	007434

1 The profile system and profile combination used must be specified with the order.

Adjustable pivot hinge for double-action doors

MODELS B AND C, SUITABLE FOR DOOR RAILS C, CM, S



Adjustable pivot hinge model B

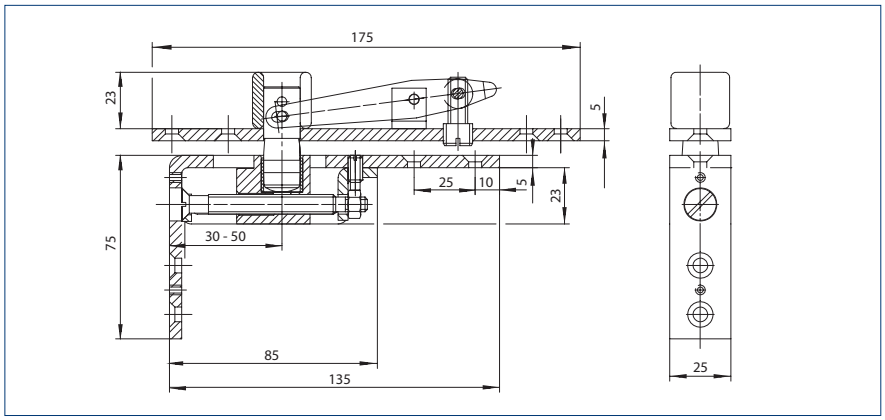

Adjustable pivot hinge model B



Adjustable pivot hinge model C

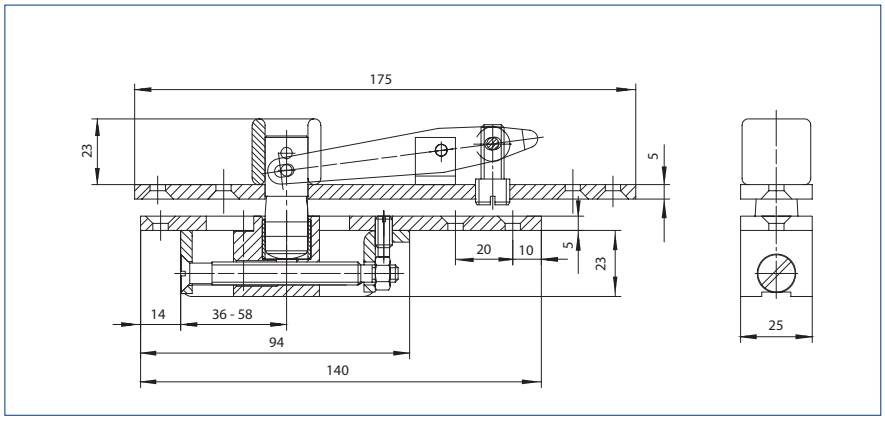

Adjustable pivot hinge model C

ADJUSTABLE PIVOT HINGE, COVER PANEL AND FRONT PANEL FOR DOUBLE-ACTION DOORS – ORDER INFORMATION

Designation	Pivot pin	Version	ID no.
Adjustable pivot hinge for double-action doors Model B, suitable for C, CM, S door rails	pivot pin 43 mm	galvanised	006371
	pivot pin 55 mm	galvanised	000108
	pivot pin 65 mm	galvanised	000903
Adjustable pivot hinge for double-action doors Model C, suitable for C, CM, S door rails	pivot pin 43 mm	galvanised	006666
	pivot pin 55 mm	galvanised	000905
	pivot pin 65 mm	galvanised	000904

RSZ 7 smoke switch control unit



VIDEO

Extendable smoke switch control unit for all GEZE hold-open devices

AREAS OF APPLICATION

- Approved for all GEZE hold-open devices for the early detection of fire and smoke
- Difficult lintel situations, for example with too little space above the smoke chamber
- Installation above the active leaf on the vertical wall
- Installation possible with surface-mounted line-feed

PRODUCT FEATURES

- Telescopic function for bridging overhangs of up to 30 mm
- Connection to 230 V power supply and 24 V DC supply of the hold-open device
- Power supply of the hold-open system is interrupted in the case of an alarm and the doors close
- Integrated smoke switch with automatic adaptation of the alarm threshold
- Compensates for light contamination of the smoke chamber and thus increases the service life
- Visual display of the current control panel status
- Additional smoke switches can be connected
- Surface-mounted line-feed possible

PRODUCT SCALE DRAWING

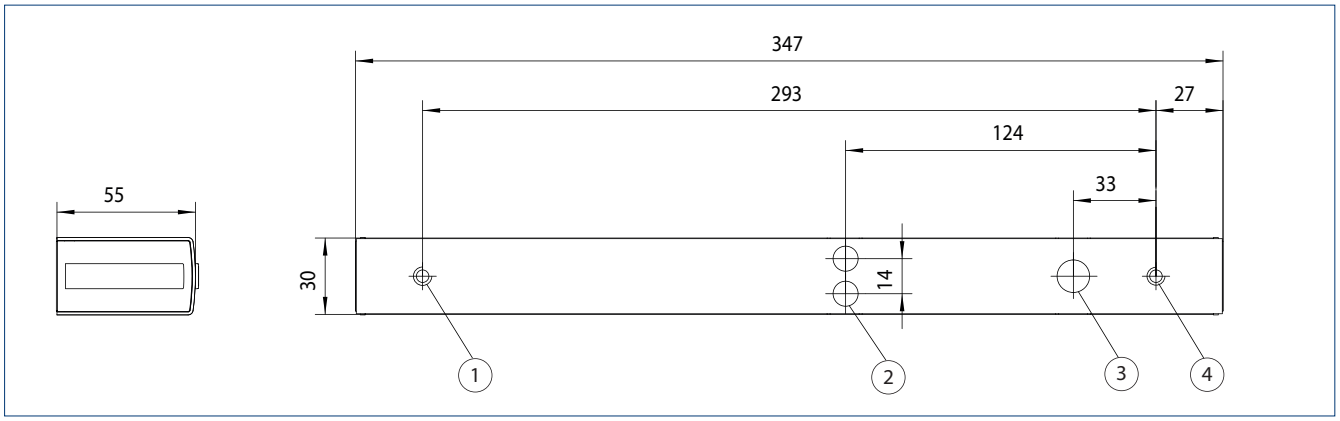

1 = threaded hole M5 | 2 = opening for additional connections | 3 = power supply (230 V) | 4 = threaded hole M5

ORDER INFORMATION

Designation	Version	ID no.
RSZ 7 smoke switch control unit Smoke switch control unit for all GEZE hold-open devices	silver-coloured	181025
	white RAL 9016	184195
	stainless steel optic[1]	184196
	acc. to RAL[2]	185231
ACCESSORIES		
FA GC 170 wireless KIT Set comprising: 1 piece GC 171 wireless module for the wireless extension of GEZE hold-open systems and 2 pieces GC 172 wireless ceiling-mounted smoke detectors		163692
GC 171 wireless module for the wireless connection of wireless components (GC 172 wireless smoke detector; GC 173 wireless thermal detector; GC 175 wireless input module) on GEZE hold-open systems	anthracite	163051
GC 172 wireless smoke detector for wireless connection to GEZE hold-open systems, battery-operated, with base, tested in accordance with EN 54-7 and EN 54-25, general construction technique permit for use with all GEZE hold-open systems	white RAL 9016	159656
GC 173 wireless thermal detector for wireless connection to GEZE hold-open systems, battery-operated, with base, tested in accordance with EN 54-5 and EN 54-25, general construction technique permit for use with all GEZE hold-open systems	white RAL 9016	159657
GC 175 wireless input module for wireless connection of manual trigger switches to the GEZE GC 171 wireless module, applicable for all GEZE hold-open systems	black	163068
GC 152 smoke detector Complete with base, 24 V DC, 20 mA, tested in accordance with EN54-7, with general official building approval for use with all GEZE hold-open systems, integrated line monitoring, conform with DIN EN 14637	white	139850
	according to RAL[2]	170523
GC 153 wireless thermal detector Complete with base, 24 V DC, 20 mA, tested in accordance with EN54-5, with general official building approval for use with all GEZE hold-open systems, integrated line monitoring, conform with DIN EN 14637	white	139881
	according to RAL[2]	170524
Manual trigger switch for the manual release of electrically controlled hold-open devices including terminating resistor for line monitoring	alpine white/red	116266
Surface-mounted box, single suitable for the AS 500 switch programme		120503
Manual trigger switch with glass pane and 5 interchangeable labels for the manual release of electrically controlled hold-open devices	alpine white/red	120880
Replacement glass pane for manual trigger switch 120880 and 120881		010994

1 Only for dry rooms | 2 Surcharge for RAL special colours, see General notes in the price list.


GEZE

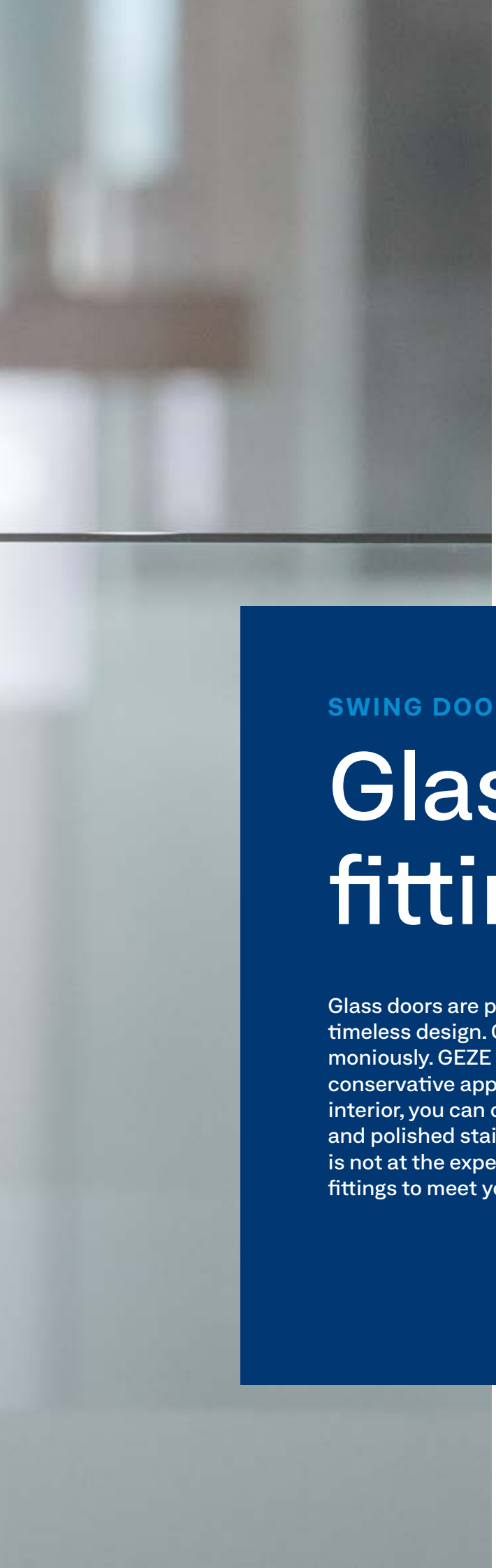

SWING DOORS

Glass clamping fittings

Glass doors are popular – they provide perspective and have a timeless design. Glass clamping fittings should also fit in harmoniously. GEZE Glass Fittings will win you over with their conservative appearance and diversity. Depending on your interior, you can choose between surfaces made from satined and polished stainless steel. And to ensure that transparency is not at the expense of safety, we have lockable glass clamping fittings to meet your special needs – locks with strike boxes.

GEZE Glass Fittings



GEZE Glass Fittings

AREAS OF APPLICATION

- For indoor and outdoor systems
- For single-action and double-action doors
- For static all-glass systems
- For toughened safety glass
- For glass thicknesses 10 and 12 mm
- Door leaf weights of up to 100 kg
- Suitable for single and double leaf swing doors

PRODUCT FEATURES

- Elegant cover caps made of polished or brushed stainless steel
- Problem-free adjustment for glass thicknesses of 10 – 12 mm

TECHNICAL DATA GLASS FITTINGS

	GEZE Glass Fittings
PRODUCT FEATURES	
Design depth irrespective of thickness of glass	32 mm
Variable pivot point with double-action doors	53 and 63 mm
Tightening torques of the clamping screws	9 Nm
Burglar-resistant installation of the door fitting / insert	●
Shims for glass thicknesses 10 and 12 mm	delivered by GEZE
Door leaf height	max. 2800 mm
Door leaf width	max. 1000 mm
Door leaf weight	max. 100 kg
Floor springs that can be used	with flat conical spindle– TS TS 500 NV / TS 550 NV
Locks prepared for profile cylinders	EURO-PZ 30/30

● = yes

STANDARD INSTALLATION

Example of installation without fanlight

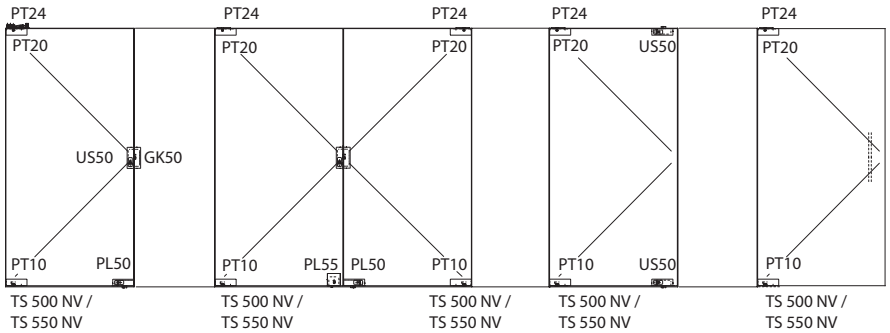

Example of installation with fanlight

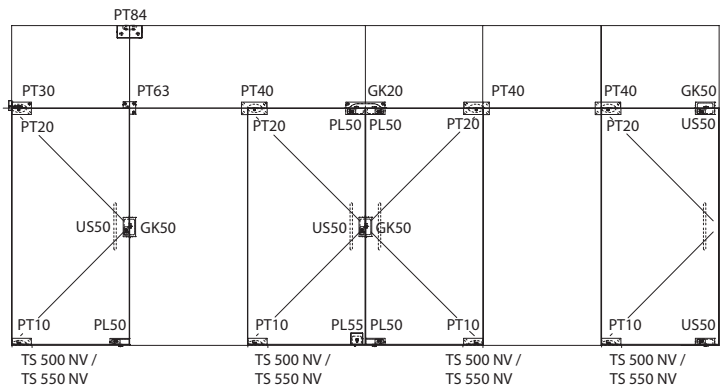

Corner fittings and pivot bearings

PT 10 – LOWER SWING LEAF CORNER FITTING



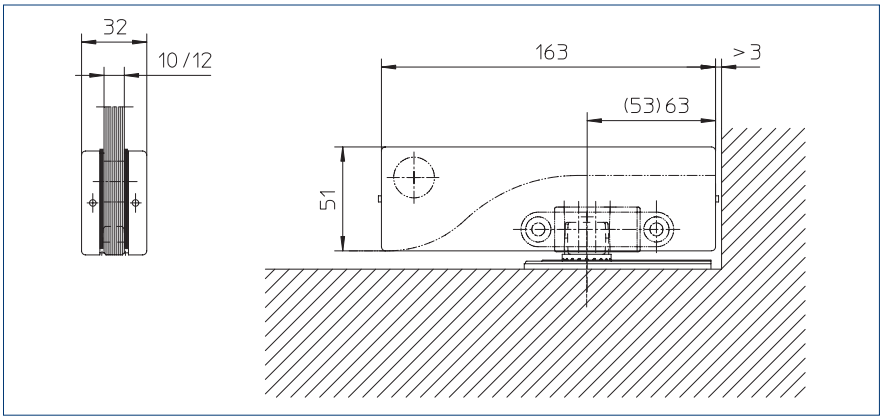

PT 20 – UPPER SWING LEAF CORNER FITTING



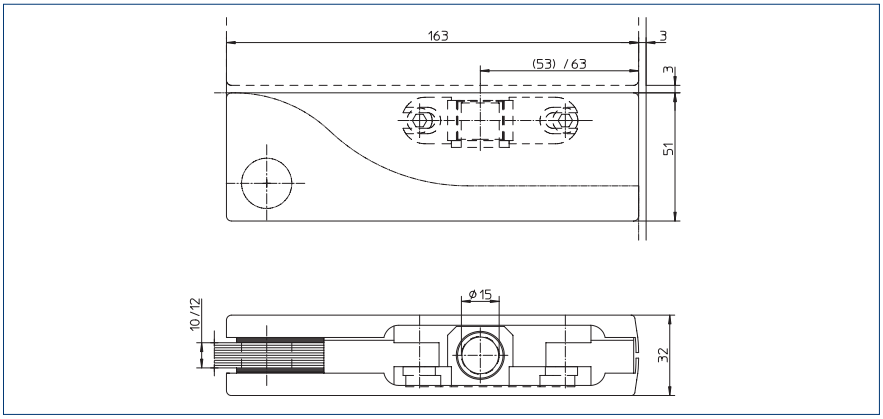

PT 24 – UPPER PIVOT WITH PIVOT BEARING BOLT



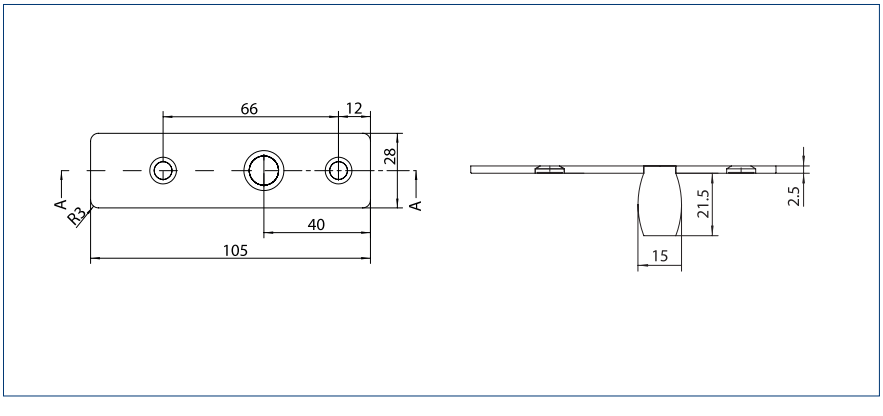

PT 21 – UPPER PIVOT BEARING WITH SCREW-OUT PIVOT BEARING BOLT

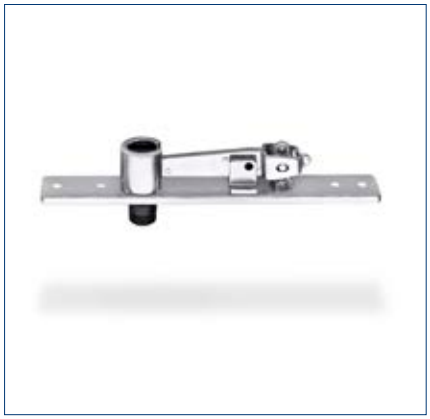

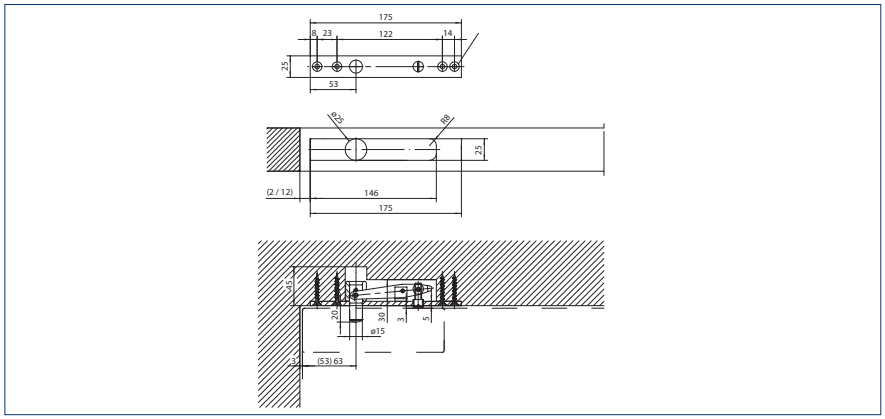

DL-FL – FLOOR-MOUNTED PIVOT BEARING



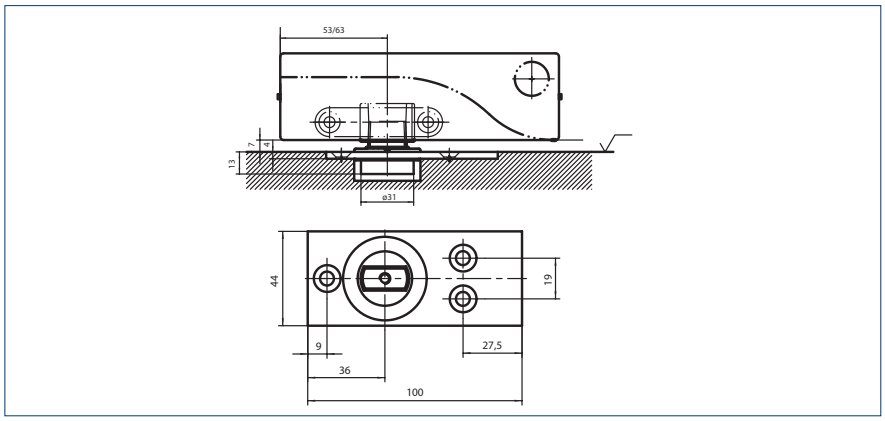

DL-RD – FLOOR-MOUNTED PIVOT BEARING



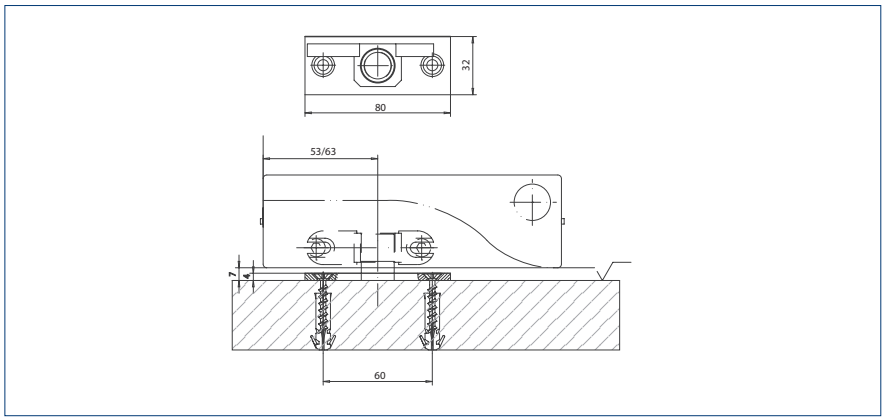

ORDER INFORMATION

Designation	Version	ID no.
GEZE Glass Fitting PT 10 Bottom side-hung leaf corner fitting with mount for flat conical spindle with installation materials for glass thicknesses 10 and 12 mm	matt stainless steel	169752
	polished stainless steel	180438
GEZE Glass Fitting PT 20 Top side-hung leaf corner fitting with mount for pivot bearing bolts (15 mm dia.) with installation materials for glass thicknesses 10 and 12 mm	matt stainless steel	169763
	polished stainless steel	180439
GEZE Glass Fitting PT 24 Upper pivot bearing with pivot bearing bolt (15 mm dia.) and screw platewith installation materials	matt stainless steel	169774
	polished stainless steel	180489
PT 21 Top pivot bearing with screw-out pivot bearing bolts	galvanised	010739
DL-FL Floor-mounted pivot bearing with flat tapered bolts (FL)	stainless steel	135393
DL-RD Floor-mounted pivot bearing with round bolts (RD)	stainless steel	135555
ACCESSORIES		
DL-FL cover plate Cover plate for concealed installation of the DL-FL with 7 mm floor level clearance of the side-hung leaf	stainless steel	146396

Fanlight and connecting fittings

PT 30 – FANLIGHT FITTING WITH PIVOT BEARING BOLT



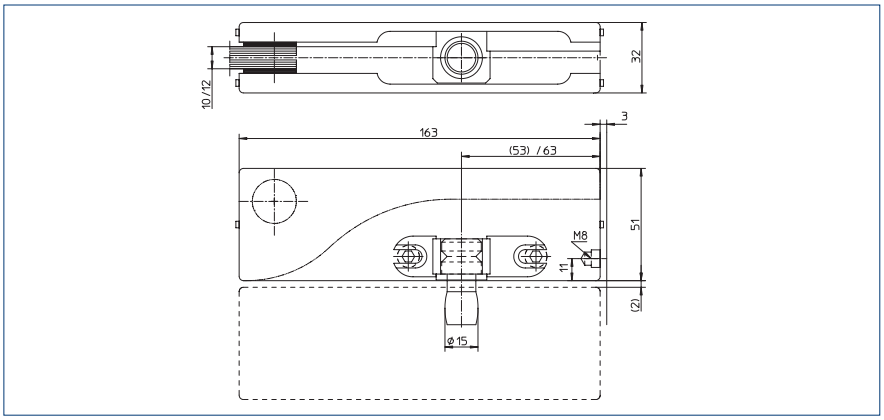

PT 40 – ANGLED FANLIGHT FITTING WITH PIVOT BEARING BOLT



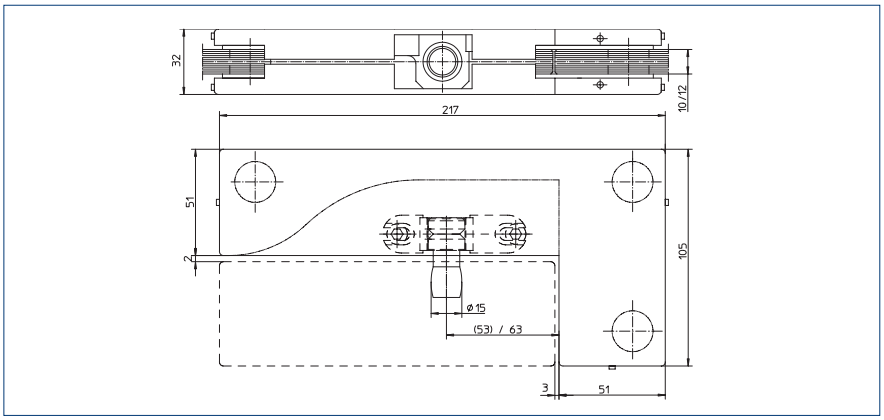

PT 84 – CONNECTING FITTINGS FOR GLASS–WALL AND GLASS–CEILING (DOUBLE)



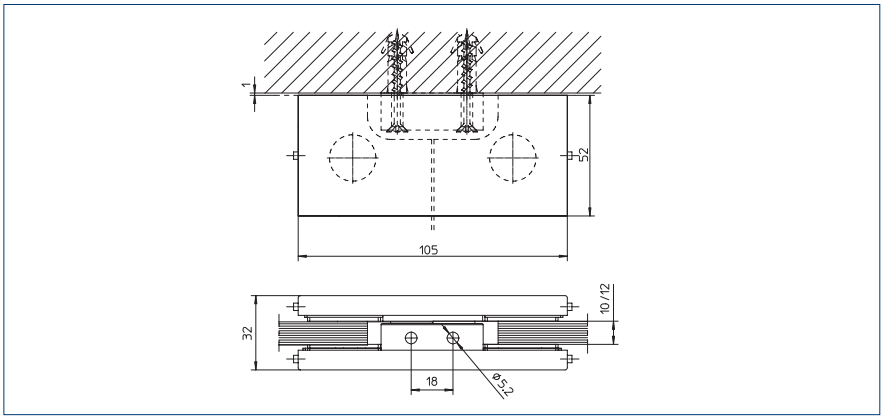

PT 90 – CONNECTING FITTINGS FOR GLASS–WALL AND GLASS–CEILING (SINGLE)



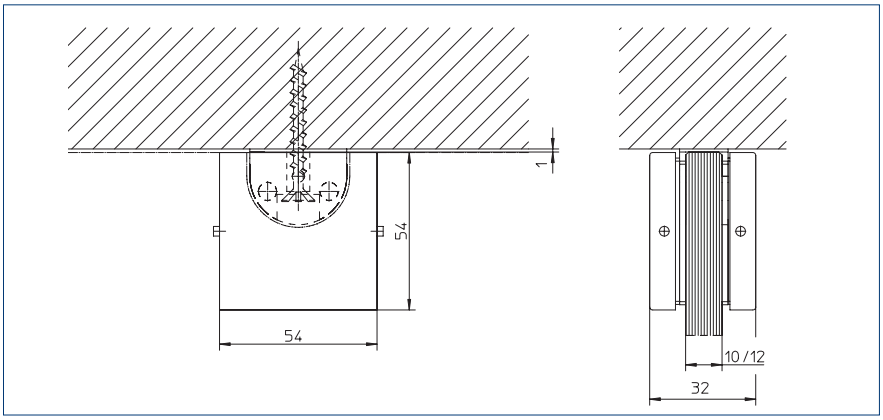

PT 63 – BRACKET AND CORNER CONNECTING FITTING WITH DOOR STOP



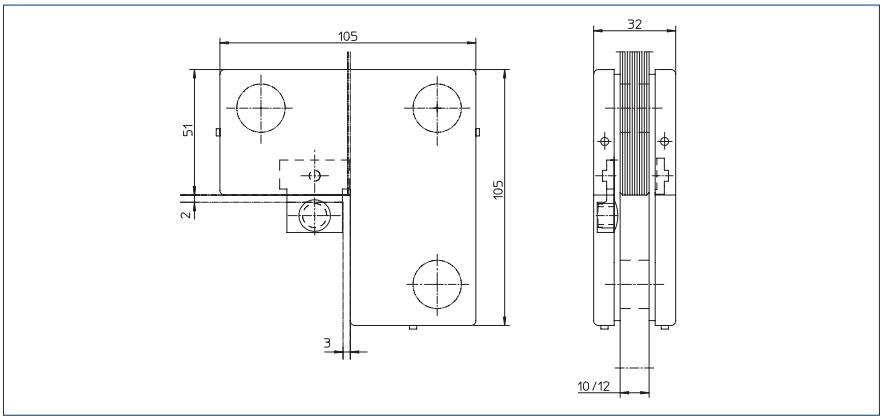

PT 24 – UPPER PIVOT WITH PIVOT BEARING BOLT



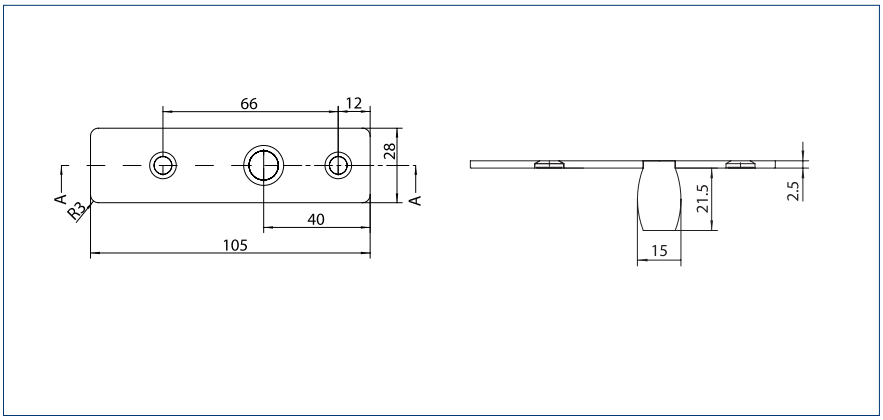

ORDER INFORMATION

Designation	Version	ID no.
GEZE Glass Fitting PT 30 Fanlight fitting with pivot bearing bolts (15 mm dia.) and wall attachment accessories with installation materials for glass thicknesses 10 and 12 mm	matt stainless steel	169764
	polished stainless steel	180440
GEZE Glass Fitting PT 40 Angle fanlight fitting with pivot bearing bolt (15 mm dia.) with installation materials for glass thicknesses 10 and 12 mm	matt stainless steel	169765
	polished stainless steel	180441
GEZE Glass Fitting PT 84 Connecting fittings for glass-wall/glass-ceiling (double) with installation materials for glass thicknesses 10 and 12 mm	matt stainless steel	169766
	polished stainless steel	180482
GEZE Glass Fitting PT 90 Connecting fitting for glass-wall/glass-ceiling (single) with installation materials for glass thicknesses 10 and 12 mm	matt stainless steel	169767
	polished stainless steel	180483
GEZE Glass Fitting PT 63 Bracket/corner connecting fitting with door stop with installation materials for glass thicknesses 10 and 12 mm	matt stainless steel	169768
	polished stainless steel	180484
GEZE Glass Fitting PT 24 Upper pivot bearing with pivot bearing bolt (15 mm dia.) and screw plate with installation materials	matt stainless steel	169774
	polished stainless steel	180489
ACCESSORIES		
IS-BS Door stop insert for PT 30 / 40	black	135105
IS-BLK Blind insert for PT 30 / 40	matt stainless steel	135349
	polished stainless steel	135106

Locks and strike boxes

PL 55 – FITTING FOR MANUAL LOCKING DEVICE, WITH ROUND BOLTS



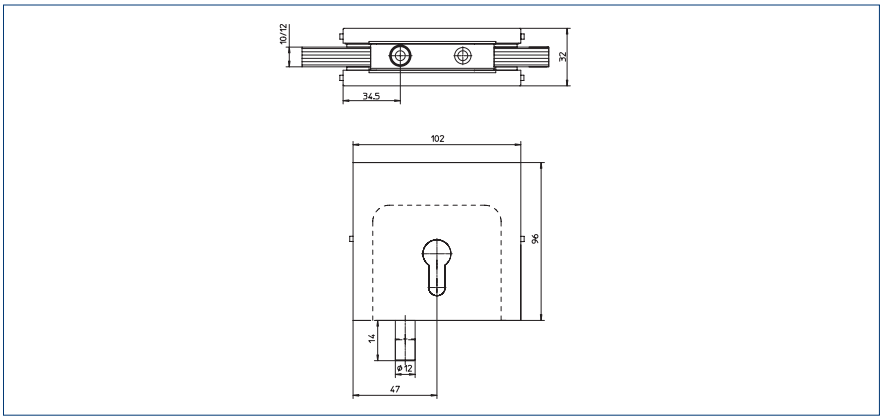

US 50 RD – LOCKING FITTING CENTRE LOCK WITH ROUND BOLT



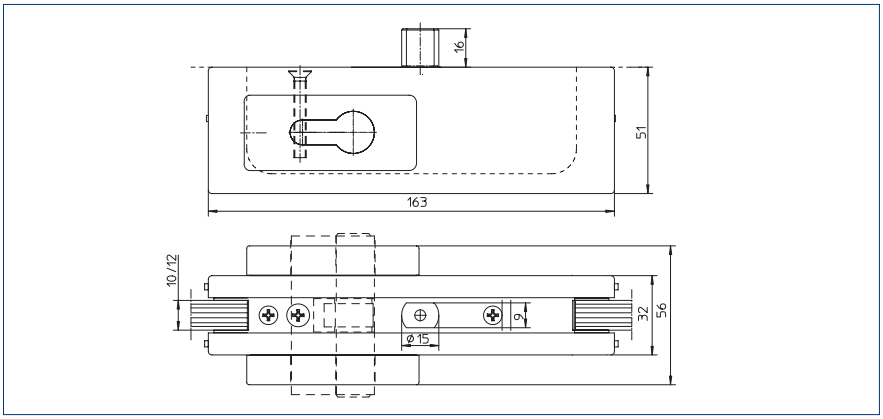

US 50 – LOCKING FITTING CENTRE LOCK WITH SQUARE BOLT



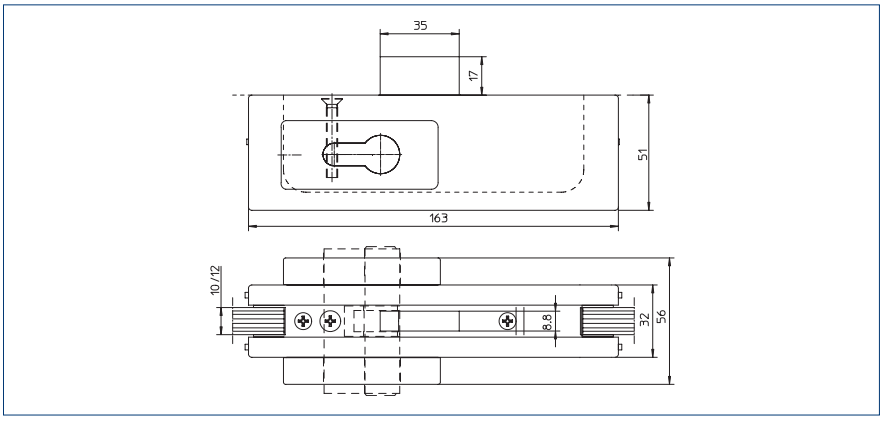

PL 50 RD – LOCKING FITTING CORNER LOCK WITH ROUND BOLT



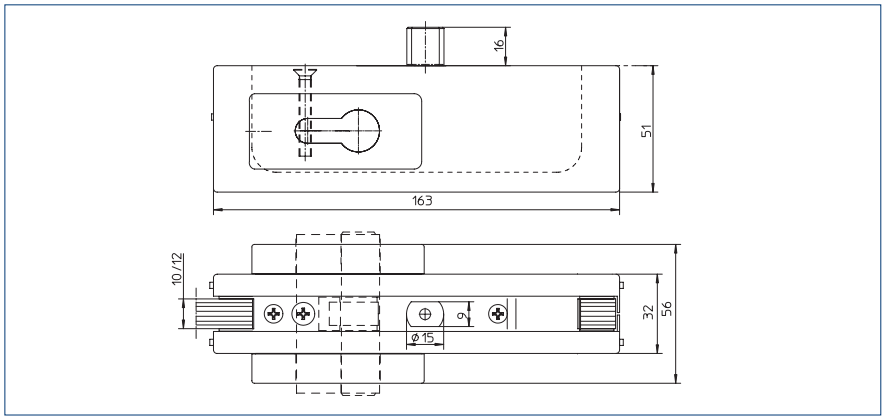

PL 50 – LOCKING FITTING CORNER LOCK WITH SQUARE BOLT



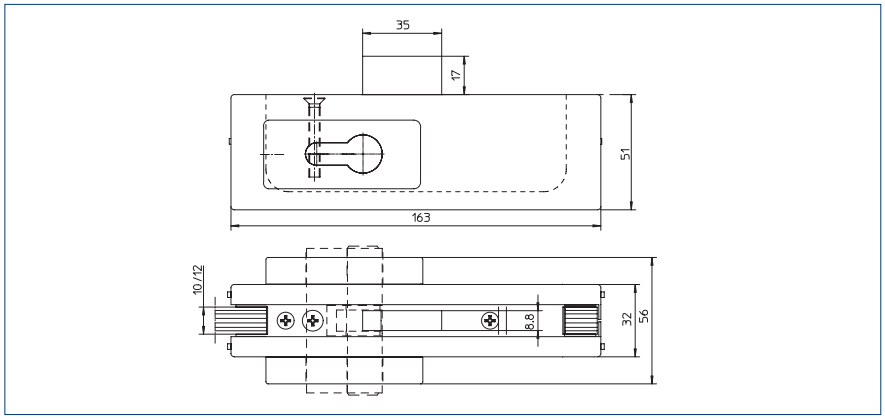

GK 50 – STRIKE BOX FOR LOCKING FITTING CENTRE LOCK



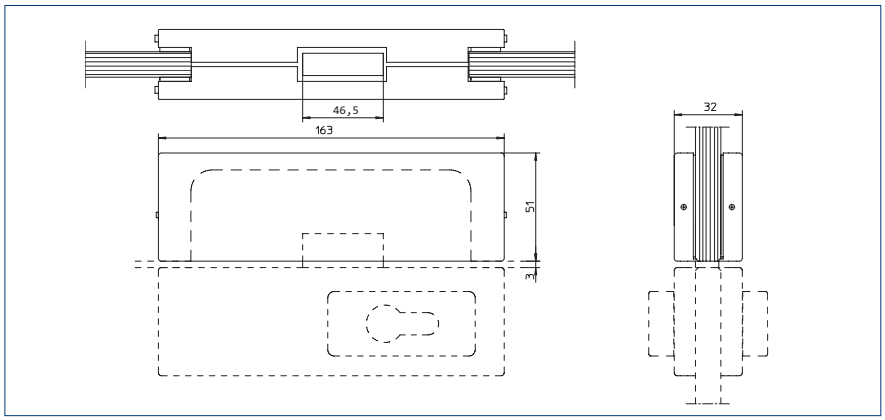

GK 20 – FANLIGHT STRIKE BOX (DOUBLE) FOR TWO CORNER LOCK FITTINGS



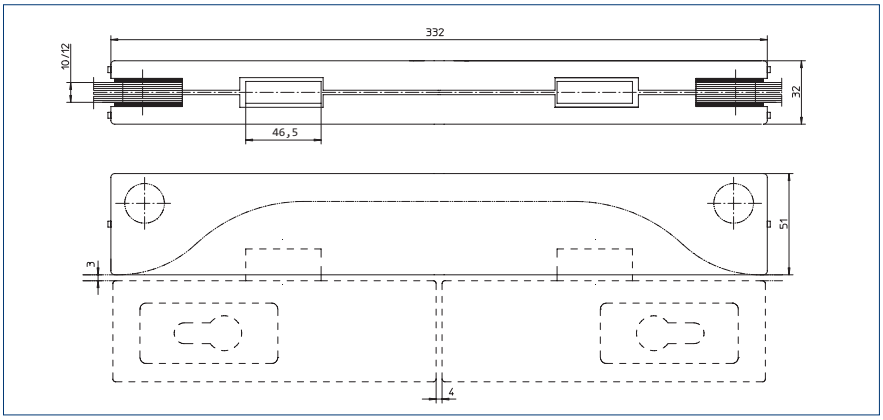

ORDER INFORMATION

Designation	Version	ID no.
GEZE Glass Fitting PL 55 Fitting for manual locking device, with round bolts with installation materials for glass thicknesses 10 and 12 mm, with Euro profile cylinder and strike plate / recess	matt stainless steel	169769
	polished stainless steel	180485
GEZE Glass Fitting US 50 RD Lock fitting central lock with round bolt with installation materials for glass thicknesses 10 and 12 mm, with Euro profile cylinder and strike plate / recess	matt stainless steel	169770
	polished stainless steel	180486
GEZE Glass Fitting US 50 Lock fitting centre lock with flat bolt with installation materials for glass thicknesses 10 and 12 mm, with Euro profile cylinder and strike plate / recess	matt stainless steel	169776
	polished stainless steel	180491
GEZE Glass Fitting PL 50 RD Lock fitting corner lock with round bolt with installation materials for glass thicknesses 10 and 12 mm, with Euro profile cylinder and strike plate / recess	matt stainless steel	169775
	polished stainless steel	180490
GEZE Glass Fitting PL 50 Lock fitting centre lock with flat bolt with installation materials for glass thicknesses 10 and 12 mm, with Euro profile cylinder and strike plate / recess	matt stainless steel	169777
	polished stainless steel	180492
GEZE Glass Fitting GK 50 Strike boxes for locking fitting central lock with installation materials for glass thicknesses 10 and 12 mm	matt stainless steel	169772
	polished stainless steel	180488
GEZE Glass Fitting GK 20 Fanlight strike box (double) for two corner lock fittings with installation materials for glass thicknesses 10 and 12 mm	matt stainless steel	169771
	polished stainless steel	180487
ACCESSORIES		
GEZE Glass Fitting Round bolt strike Locking recess for lock fittings with round bolts with installation materials	matt stainless steel	169778
	polished stainless steel	180493
GEZE Glass Fitting Square bolt strike Strike plate for locking fittings with flat bolt with installation materials	matt stainless steel	169779
	polished stainless steel	180494



Installation situation (photo: GEZE GmbH)





SWING DOORD

Modular fixed panel profile systems

The clip-on aluminium cover profile can easily be replaced without changes to the basic system. This is made possible by the clamping plates that can be freely positioned in the profile and which adjust to all glass thicknesses.
Construction components outside of the system such as glazing blocks to calibrate the glass panes art required because the relevant calibration units are integrated within the clamping system. This simplifies installation, reduces stocks and increases safety. The clamping screws on the clamping plate are screwed into the freely positionable threaded nuts which secures them against unauthorised removal.

Fixed panel profile with clip-on cover profile design 40



Modular fixed panel profile with clip-on cover profile design 40

AREAS OF APPLICATION

- For glass thicknesses 8, 10 and 12 mm
- For secured outer areas
- For toughened safety glass (ESG)
- For horizontal and vertical glass edging
- For use in combination with Glass Fittings and Pendulo double-action doors

TECHNICAL DATA FOR MODULAR FIXED PANEL PROFILE SYSTEMS

Product features	Profile design 40
Overall depth	30 mm
Profile height	40 mm
Usable glass thicknesses	8, 10 and 12 mm
Installation heights (max.)	4,000 mm
Glass pane weight (max.)	150 kg
Glass pane width (max.)	2,500 mm
Available surfaces	Silver-coloured and stainless steel optic anodised
Material	Aluminium
Length (max.)	6,000 mm
Burglar-resistant installation of the fitting	yes
Cover caps	Aluminium/Stainless steel
Position of the clamping unit in the basic profile	variable

* without front end caps also for 12 mm

PRODUCT SCALE DRAWING

MODULAR FIXED PANEL PROFILE WITH CLIP-ON COVER PROFILE DESIGN 40

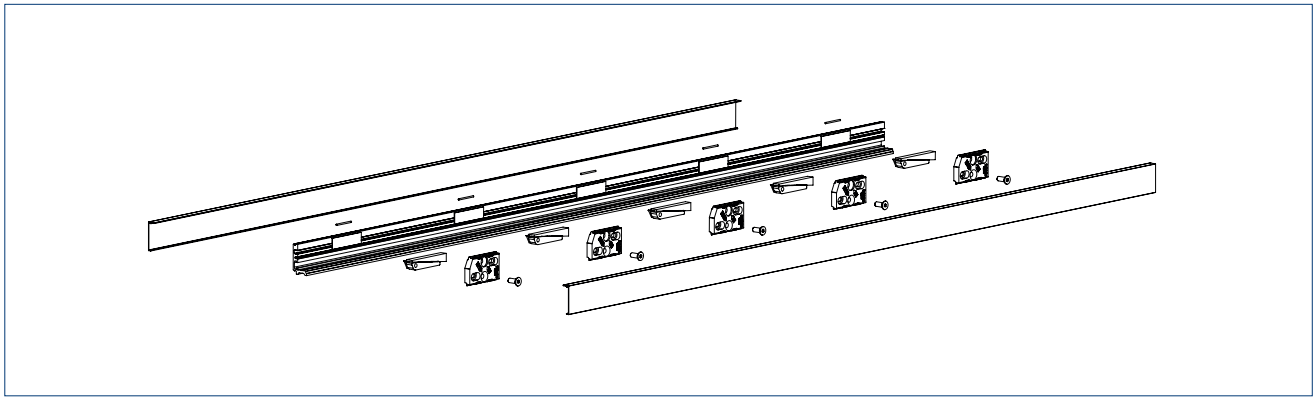

SYSTEM COMPONENTS



Basic profile

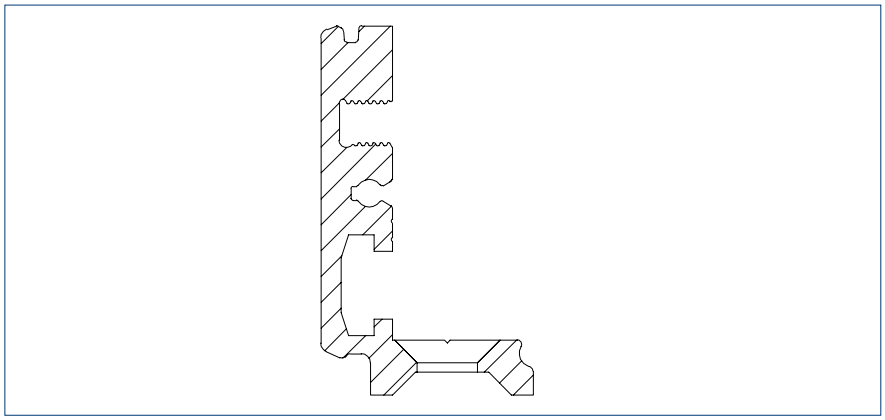

Basic profile



Clamping units

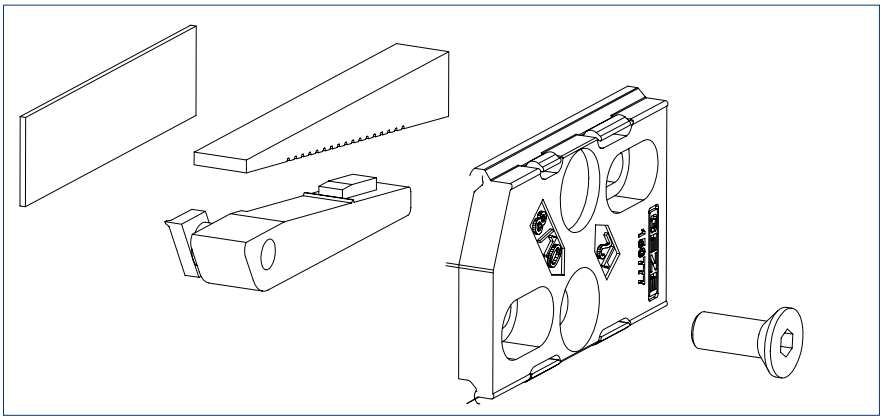

Clamping units



Clamping shim for 8 mm glass thickness

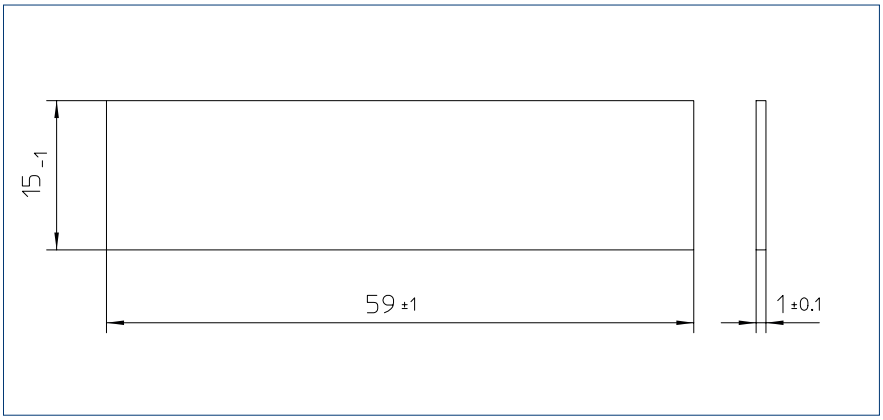

Clamping insert for 8 mm glass thickness



Safety set for fanlights and free-hanging glass panes

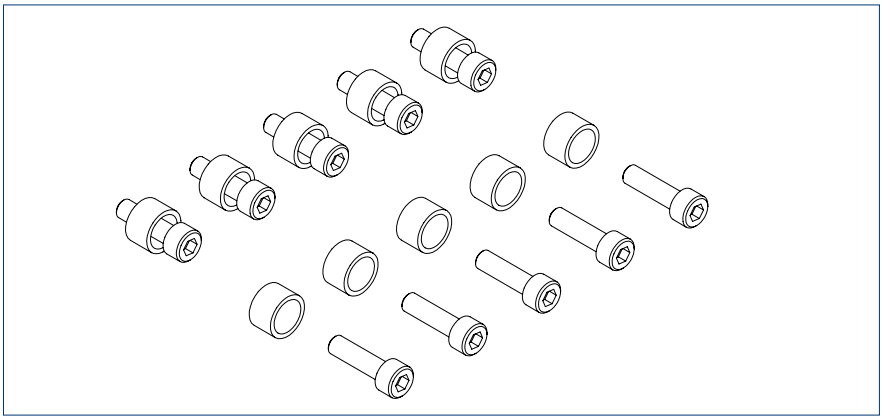

Safety set for fanlights and free-hanging glass

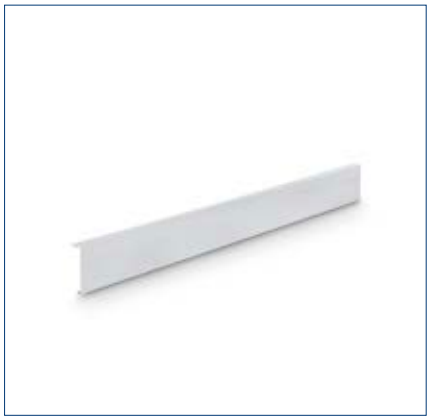

Clip-on cover profile design 40

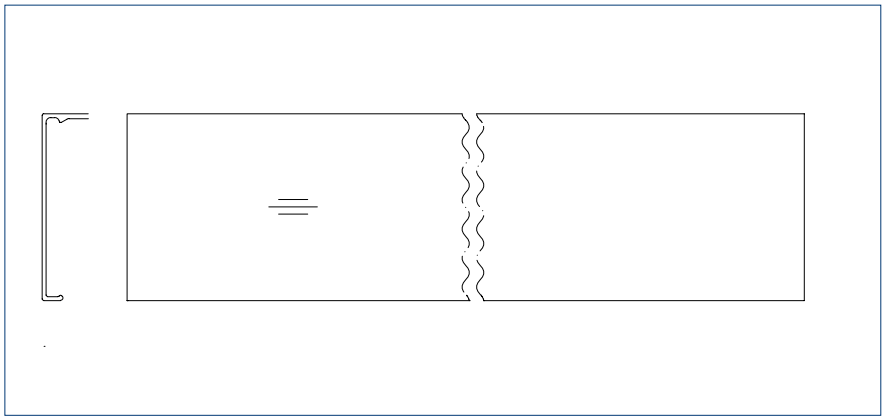

Clip-on cover profile design 40



End cover caps for profile design 40

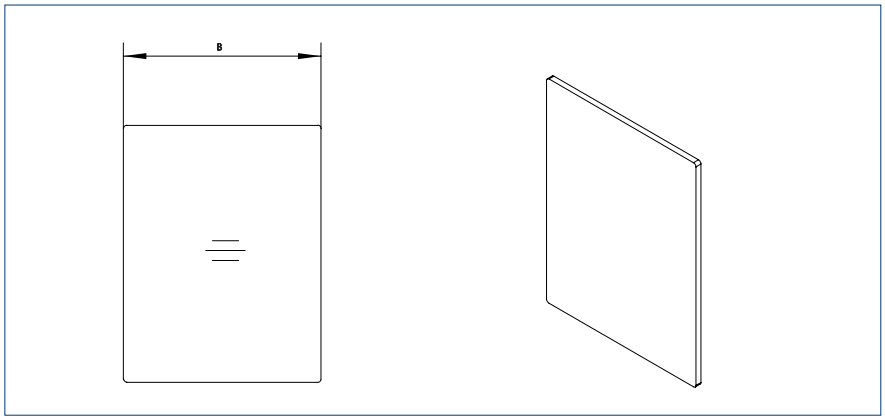

Front side cover cap profile design 40, glass thicknesses 8, 10 and 12 mm
B = Width (30 mm for glass thicknesses 8 and 10 mm, 32 mm for glass thickness 12 mm)

ORDER INFORMATION

Designation	surface	Version	ID no.
Clamping system units Set 20 Basic set for basic profiles, consisting of 20 clamping jaws 8-12 mm, 20 fixing screws, 20 threaded nuts, 20 adjusting wedges, 20 clamping inserts and 20 sealing insert sections			156692
Clamping system unit Set 01 for basic profile each consisting of one clamping jaw 8-12 mm, fixing screw, screw-in nut, adjustment wedge and clamping insert			151810
Clamping shims (fixed panel) Set 40 for 8 mm glass thickness, adequate for 20 clamping units (Set = 40 pc.)			156758
Clip-on cover profile design 40– aluminium	anodised	EV1	155742
	anodised	stainless steel optic	151137
Front side cover cap for profile design 40 for glass thicknesses 8 and 10 mm (set = 2 pc.)	anodised	EV1	156700
	brushed	Matt stainless steel	156701
Front side cover cap for profile design 40 for glass thickness 12 mm (set = 2 pc.)	anodised	EV1	156716
	brushed	Matt stainless steel	156717
Set safety variant for fanlights and free-hanging glass panes consisting of 5 pieces glass protection sleeves and 5 safety screws			156760

We are GEZE.

For liveable buildings

GEZE stands for innovation, high quality and comprehensive support of building technologies. From the initial idea, planning and operational implementation with standard products to customised system solutions and individual service and maintenance plans. We offer an extensive product range of door, window and safety technology products and are a major driving force behind the digital networking of building automation.

GEZE GmbH

Reinhold-Vöster-Strasse 21 – 29

71229 Leonberg

Germany

Telephone: +49 7152 203 0

Fax: +49 7152 203 310

E-Mail: info.de@geze.com

www.geze.com

2026_11 ID no. 091607 EN Subject to change without notice